woelm.

HELM Conveyor Technology
Selection and Planning Criteria

HELM

Conveyor Technology

Group 14
Conveyor Technology

Page	3	Planning example
Page	4	Load values of track
Page	5	Loading criteria
Page	6	Trolleys - standard
Page	11	Load carriers - standard
Page	13	Buffer jackets and joint rings
Page	14	HELM track suspension examples
Page	21	Standard and special radii
Page	23	Swivel switches
Page	24	Tongue Switches
Page	27	Turntable combinations
Page	28	Self-controlling autom. tongue switch
Page	29	Manually and remotely controlled
		tongue switches
Page	30	Turntables
Page	32	Turntable switches
Page	33	Slide-in device, swivel switch
		and end stop
Page	34	Loading and unloading stations
		HELM - power supply
Page	35	HELM electric track drive
Page	36	Lift station
Page	38	HELM combination
		Automation of the manual overhead conveyor
Page	41	HELM- Product range
Page	45	Information overview
Page	51	Execution examples
Page	54	Enquiry form

From experience we know that smooth information transfer in an installation as complex as a manual overhead conveyor system requires an efficient system of data preparation.

The existing HELM catalogue system does meet these requirements. Divided into three parts, it provides detailed information for a general overview as well as for planning and design.

Catalogue Group 14
- Selection and planning criteria -

enables you to evaluate your situation and helps you to select the right components for your system.

Prospectus 50
- Circular and Power & Free Conveyors

Prospectus D+F
- Data and Facts –

is the documentation of dimensions, weights and technical drawings of all component parts employed in a HELM conveyor system.

Planning example

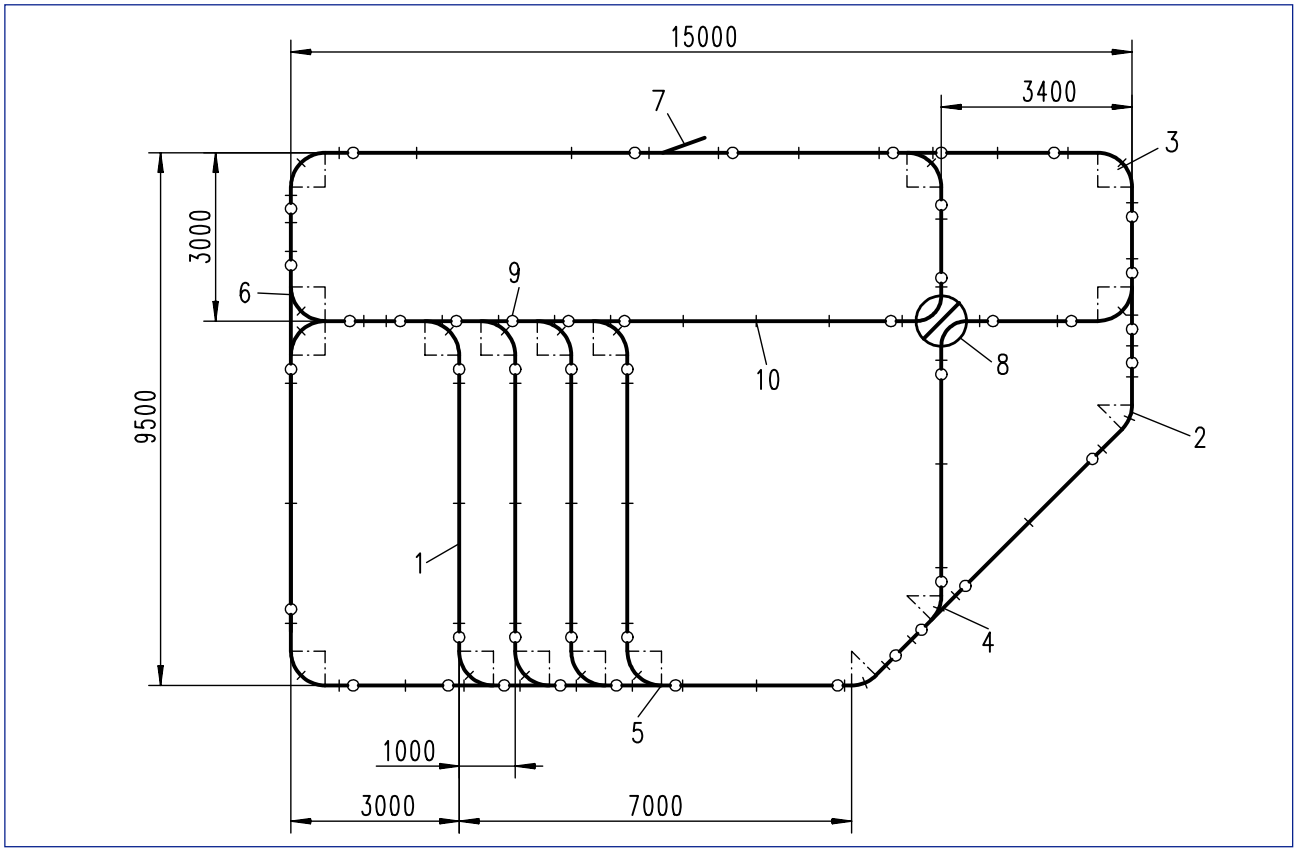

Pos.	pcs.	length mm	description	HELM no.	Comment
1.1	1	6000	track	600	
1.2	1	4800	track	600	
1.3	4	4400	track	600	
1.4	1	3190	track	600	
1.5	1	3200	track	600	
1.6	1	3000	track	600	
1.7	1	2600	track	600	
1.8	1	2290	track	600	
1.9	1	2010	track	600	
1.10	1	1500	track	600	
1.11	1	1400	track	600	
1.12	1	1300	track	600	
1.13	1	1010	track	600	
1.14	2	900	track	600	
1.15	1	600	track	600	
2	2	r=790	bend	600	45°
3	3	r=790	bend	600	90°
4	1	r=790	tongue switch	1631 Z-A	45°, left with chain hoist
5	10	r=790	tongue switch	1631 Z-A	90° right with chain hoist
6	1	r=790	switch combination		with chain hoist
7	1		slide-in device	1637	left
8	1		turntable switch	1643	with chain hoist
9	46		splice joint	1603	
10	23		split support bracket	1608	

Load Values of Track
Track Profile 300 - 700

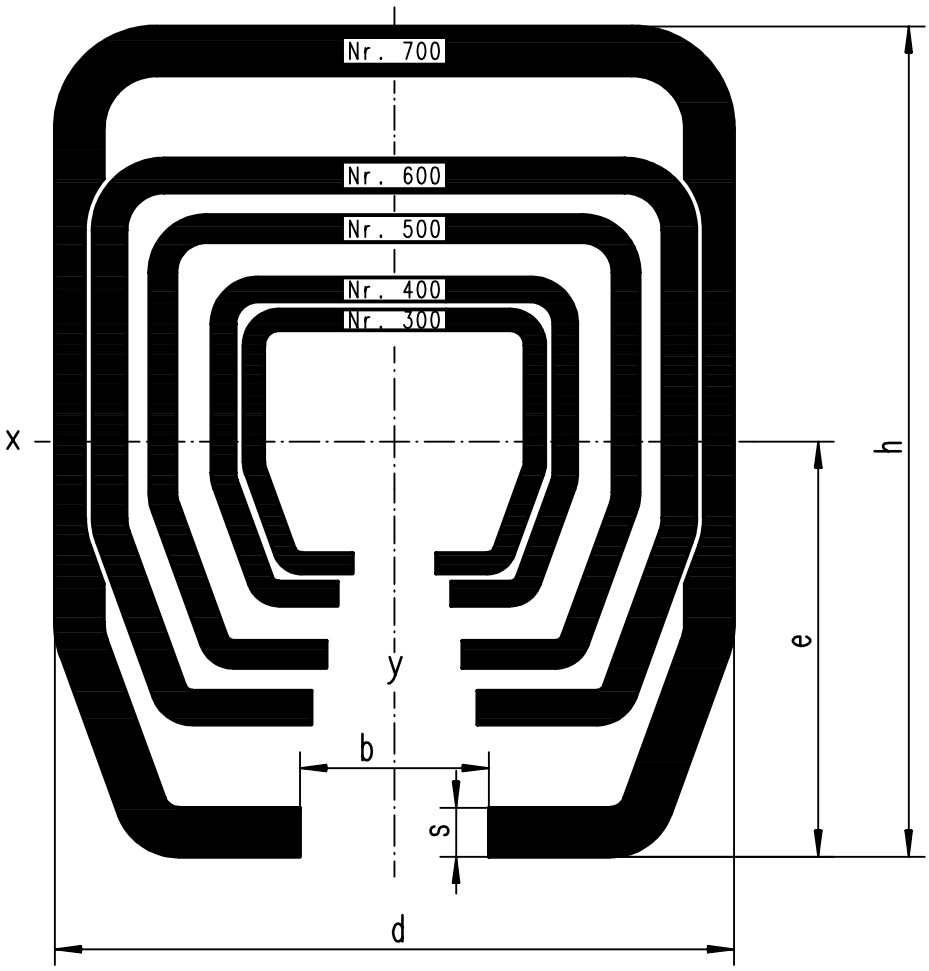

The above shown HELM track profiles made of material S235JRG2 are available.
These profiles can be delivered in plain or zinc plated, in 6 m standard length or any individual length. The profiles no. 300, 400 and no. 500 can be provided in stainless steel V2A (material X 5 CrNi 18 10).

Since the load-capacity of the track profiles is often exceeded in buffer areas, the meter load must be checked.

HELM-Profile	h mm	d mm	b mm	s mm	Wx cm^3	IX cm^4	e mm	weight kg/m	load kg*
No. 300	35	40	11	2,75	2,52	5,02	19,9	2,52	100
No. 400	43,5	48,5	15	3,2	4,4	10,93	24,8	3,57	200
No. 500	60	65	18	3,6	10,07	34,08	33,8	5,63	500
No. 600	75	80	22	4,5	19,76	83,08	42	8,77	1000
*No. 700	110	90	25	6,5	51,68	312,71	60,5	16,46	1600

Carrying capacity per metre when suspension fixture distance equals ca. 1m.

Selection and Planning Criteria
Loading criteria

Static
When designing a manual overhead conveyor system, the loading types as detailed in the illustration opposite have to be taken into account. When using several carriages, the piling up – in any part of the track network - of single loads can reach the uniform load level. The span L depends on the quantity of the load and the type of the load. The following criteria have been assumed:

1. max tension from allowable [] = 107 N/mm^2
2. max. bowing under load from allowable f = L/300

The connection area of tow track parts is bridged by a splice joint. For static reasons a fixture point has to be placed immediately next to a connection point (see illustration: L1 = ca. 250 mm)

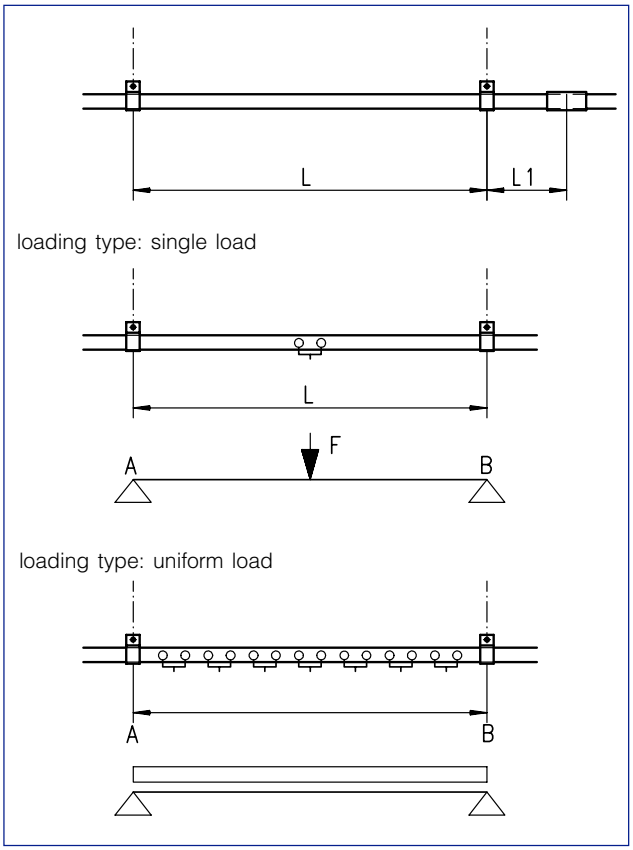

The load

Uniaxial trolley

Mainly intended for single loads which remain undamaged when clashing while traveling along straight sections of track.

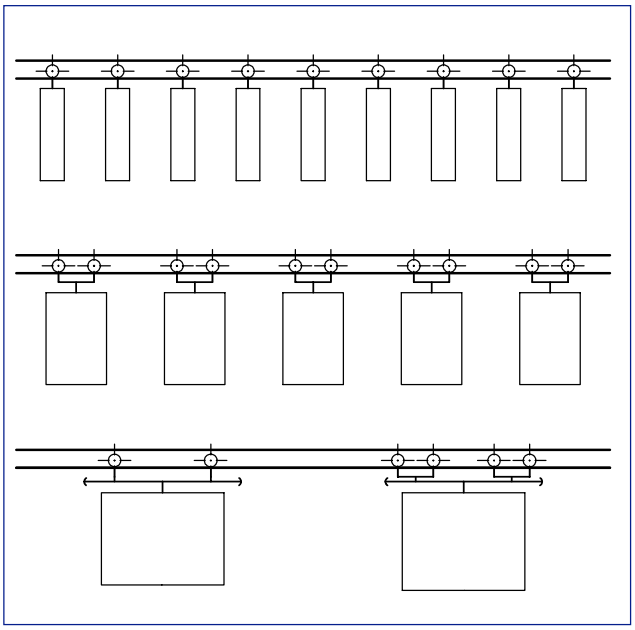

Biaxial trolley

For smooth traveling along the track without canting. Mainly intended for loads of limited weight and dimensions which remain undamaged when clashing.

Bi or four axial load carriers

The coupling of two trolleys and a traverse with buffer jackets and joint ring offers a variety of advantages:

- Heavier loads up to a max. weight of 1600 kg will be conveyed safely in track and with a safety distance.
- Reduced danger of track overloading.
- Carriages travel smoothly and vibrationless through curves and switches.

Load values
Trolleys – standard

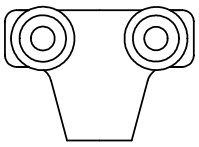

Double-paired trolley (single load)
for special on-site constructions

max. capacity of trolley

1310 S	1410 S	1510 S	1610 S	1710 S
40 kg	80 kg	200 kg	400 kg	800 kg

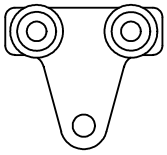

Double-paired trolleys (single load)
with load hook - accessory
with vortex eye - accessory

1310	1410	1510	1610	1710
40 kg	80 kg	200 kg	400 kg	800 kg

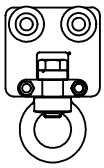

Double-paired trolleys (single load)

324 Ri	424 Ri	524 Ri	624 Ri	724 Ri
40 kg	80 kg	200 kg	400 kg	800 kg

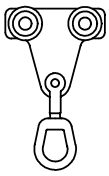

Double-paired trolleys (single load)
pivoted vortex eye

1310 Ri	1410 Ri	1510 Ri	1610 Ri	1710 Ri
40 kg	80 kg	200 kg	400 kg	800 kg

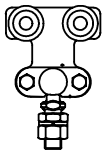

Double-paired trolleys (single load and traverse type)

1314	1414	1514	1614	1714
40 kg	80 kg	200 kg	400 kg	800 kg

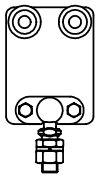

Double-paired trolleys (single load and traverse type)

1314 T	1414 T	1514 T	1614 T	1714 T
40 kg	80 kg	200 kg	400 kg	800 kg

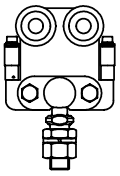

Double-paired trolleys (single load and traverse type)

1314 T/F	1414 T/F	1514 T/F	1614 T/F	-
40 kg	80 kg	200 kg	400 kg	-

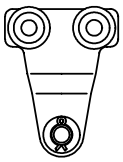

Double-paired trolleys (single load and traverse type)
not curve going

-	1418	1518	1618	1718
-	125 kg	250 kg	500 kg	1000 kg

Rollers suitable for max. ambient temperature 100° C – standard
Rollers suitable for max. ambient temperature 250° C – “design K”

Technical data sheets
Load trolleys - standard

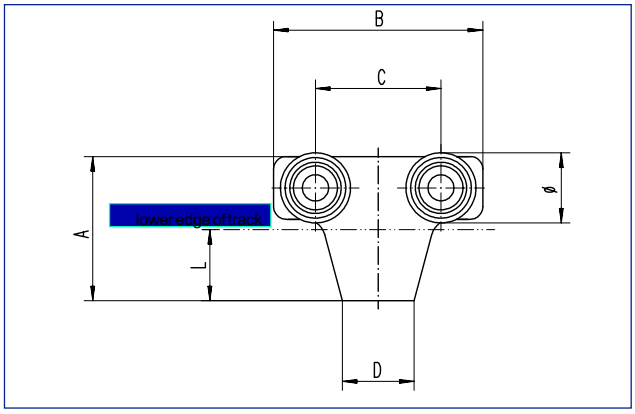

Trolley 1310 S - 1710 S

Profile	300	400	500	600	700
A	51	69	80	100	140
B	80	100	120	145	210
C	50	60	70	80	105
D	28,5	34,5	45	80	80
L	25	34	32	40,5	49
Ø	27,9	34	48	60	89

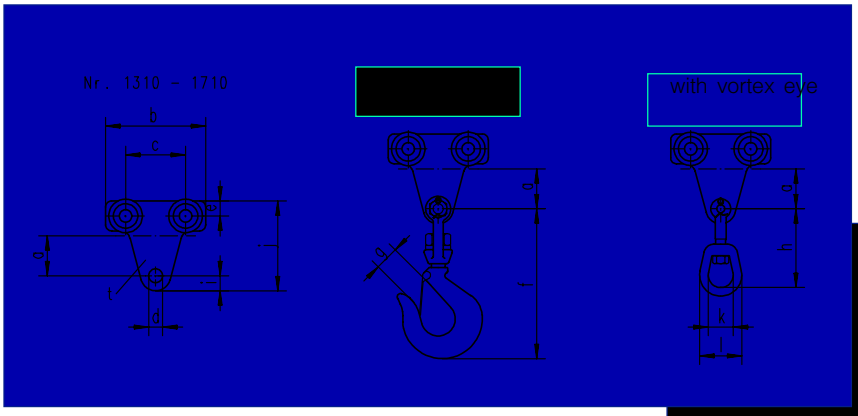

[redacted]

Double-paired trolleys 1310 - 1710

HELM no.	1310	1410	1510	1610	1710
max. load	40	80	200	400	800
a	31	40	42	47	74
b	80	100	120	145	210
c	50	60	70	80	105
d	Ø10	Ø14	Ø18	Ø22	Ø26
e	10	15	20	25	40
f	-	125	125	125	152
g	-	24	24	24	28
h	79	79	79	98	126
i	12	15	20	24	35
j	70	90	110	130	200
k	25	25	25	31	37
t	8	8	10	12	15
l	42	42	42	51	64
load hook	-	LA-24/1	LA-24/1	LA-24/1	LA-24/2
vortex eye	LA-34/2	LA-34/2	LA-34/2	LA-34/3	LA-34/4

Trolley 324 Ri - 724 Ri

Profile	300	400	500	600	700
a	68	90	110	150	200
b	37	50	56	80	100
c	72	85	110	140	200
ød	27,9	34	48	60	89
øe	30	35	40	50	60
f	44	49	59	78,5	109
g	85	98	114	150	194

Rollers suitable for max. ambient temperature 100° C – standard
Rollers suitable for max. ambient temperature 250° C – “design K”

Technical data sheets
Trolleys - standard

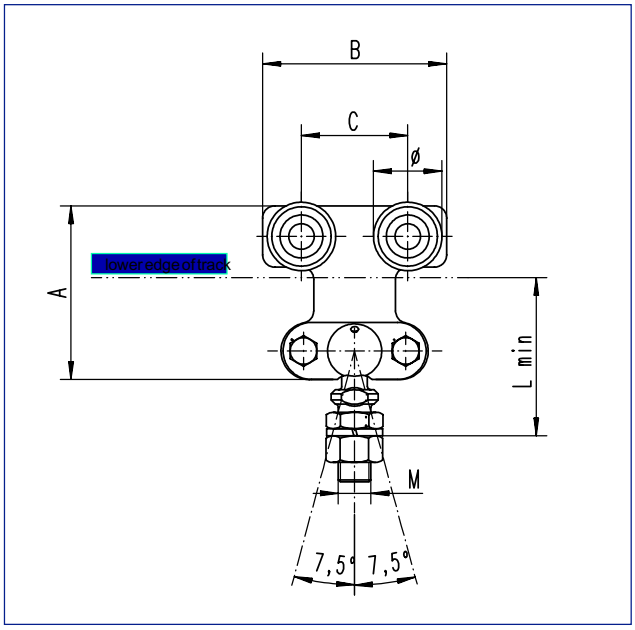

Trolley 1314 - 1714

Profile	300	400	500	600	700
A	70	85	115	145	180
B	70	90	110	140	200
C	38	52	56	75	105
L min.	66	78	98	126	136
M	M12	M16	M20	M24	M30
Ø	27.9	34	48	60	89

Trolley 1314 T - 1614 T
norm. temp. -20° bis 100°C

- 1614 T/K
high temp. -30° bis 250°C

Profile		B	C	A min.	L min.	M	Ø
400	1414 T	90	53	120	113	M16	34
500	1514 T	100	56	165	148	M20	48
600	1614 T	120	75	200	181	M24	60

* measure A is available in any length!

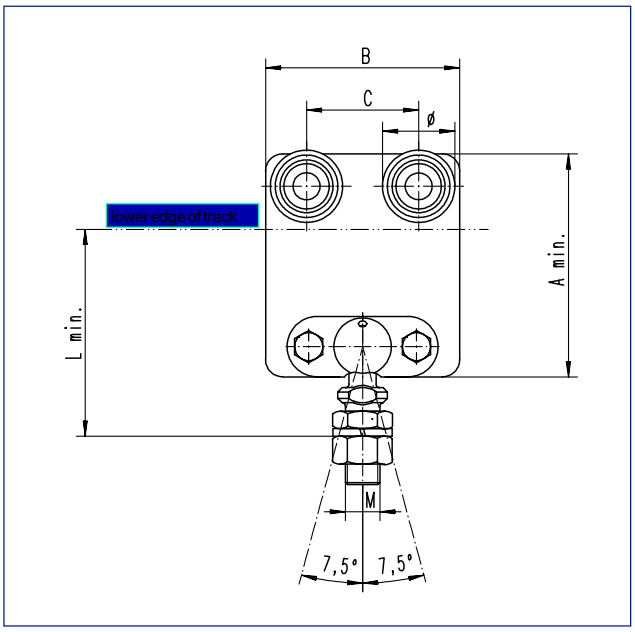

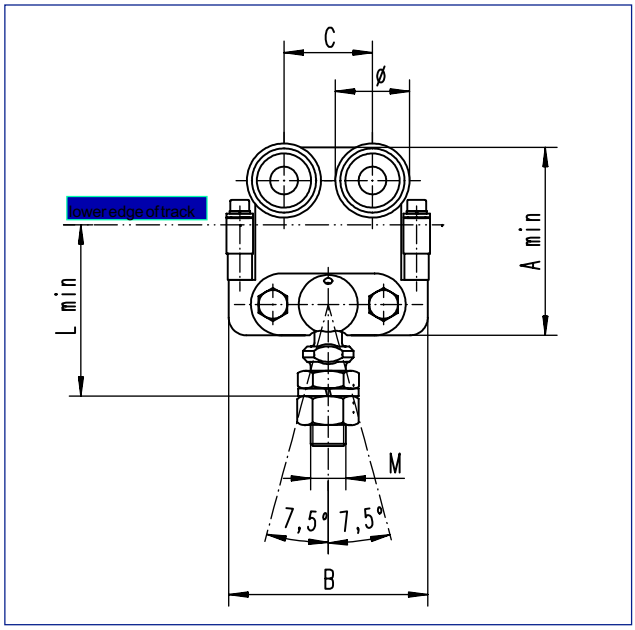

Trolley 1314 T/F - 1614 T/F
norm. temp. -20° bis max. 100°C
- 1614 T/F/K
high temp. -30° bis max. 250°C

Profile	300	400	500	600
A min.	70	85	120	145
A norm.	70	120	165	200
A spec.			220	
C	32	40	50	62
B	70	90	100	140
L min.	66	78	103	126
M	M12	M16	M20	M24
Ø	27.9	34	48	60

* measure A is available in any length!

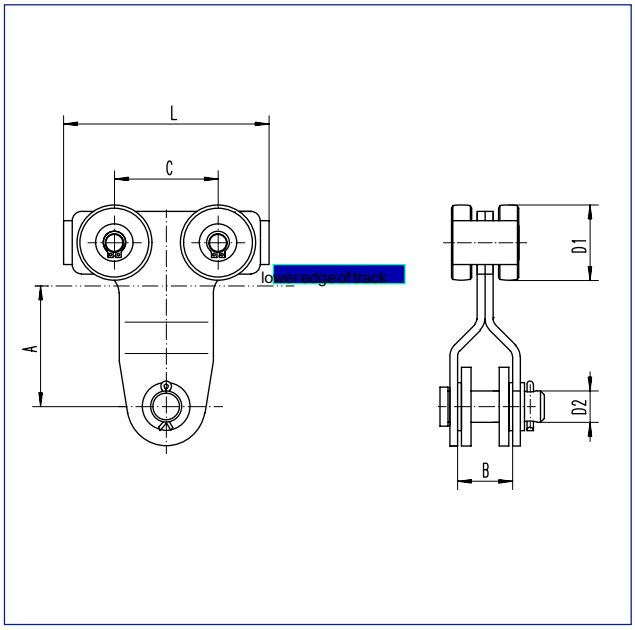

Trolley 1418 - 1718 without load hook

Profile	400	500	600	700
L	100	130	150	214
C	52	66	75	105
A	65	76	91,5	117
Ø D1	34	48	60	89
Ø D2	16	20	22	26
B	30	35	35	45

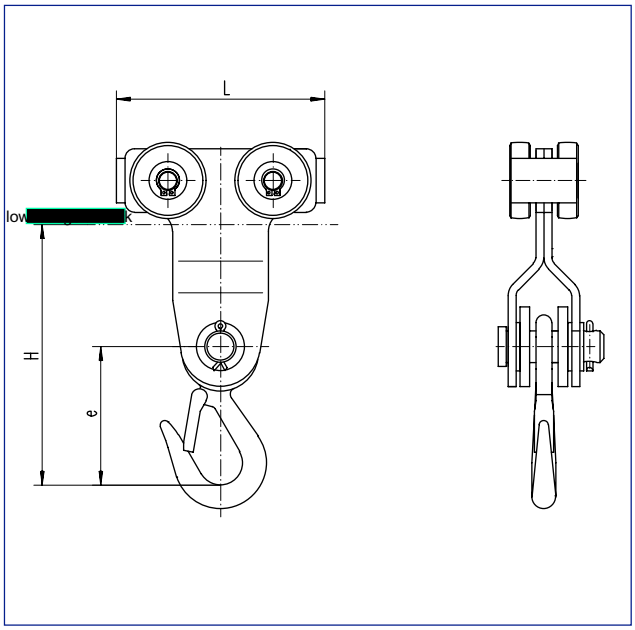

Trolley 1418 - 1718

Profile	400	500	600	700
L	100	130	150	214
e	73	87	82	92
H	138	163	174	209
load hook	LA-23/1-340	LA-23/2-450	0 5 180 00 05-500-	0 5 180 00 10-1000-
max. load (kg	125	250	500	1000

Rollers suitable for max. ambient temperature 100° C – standard
Rollers suitable for max. ambient temperature 250° C – “design K”

Technical data sheets
Trolleys - standard

(Only for inferior purposes)

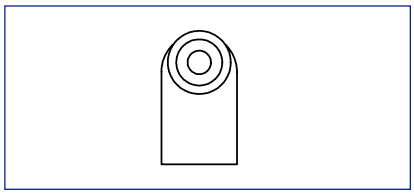

single-paired trolleys (single load)
for special on-site constructions

max. capacity of trolley

1311 S	1411 S	1511 S	1611 S	1711 S
20 kg	40 kg	100 kg	200 kg	400 kg

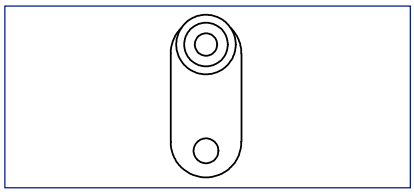

single-paired trolley (single load)

1311	1411	1511	1611	1711
20 kg	40 kg	100 kg	200 kg	400 kg

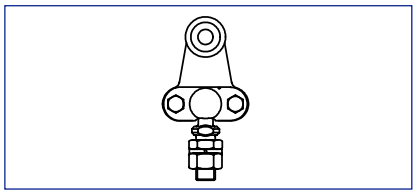

single-paired trolley (single load)

1315	1415	1515	1615	1715
20 kg	40 kg	100 kg	200 kg	400 kg

Loading Criteria
Load carriers - standard

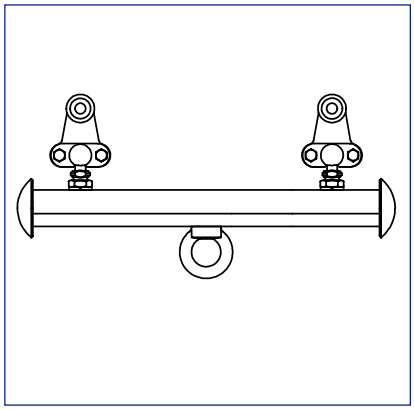

with ring nut, fixed or pivoted
with load hook pivoted

max. load

1325	1425	1525	1625	1725
40 kg	80 kg	200 kg	400 kg	800 kg

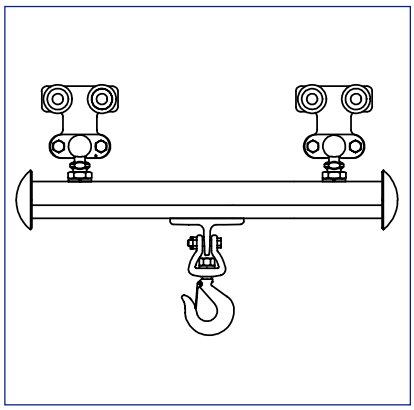

with ring nut, fixed or pivoted
with load hook pivoted

max. load

1324	1424	1524	1624	1724
80 kg	160 kg	400 kg	800 kg	1600 kg

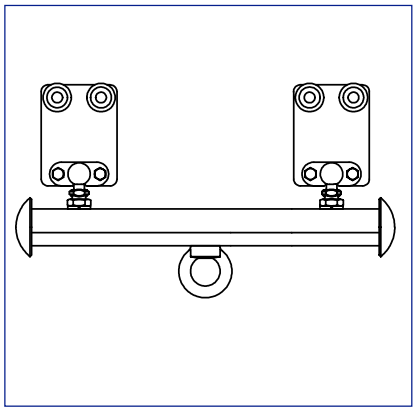

with ring nut, fixed or pivoted
with load hook pivoted

max. load

1324 T	1424 T	1524 T	1624 T	1724 T
80 kg	160 kg	400 kg	800 kg	1600 kg

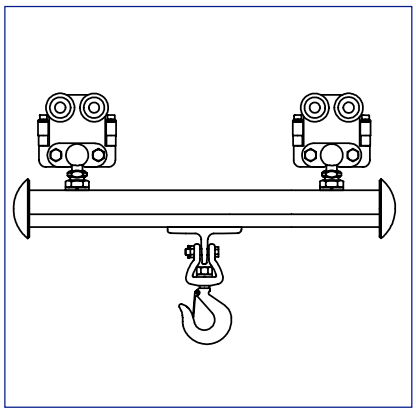

with ring nut, fixed or pivoted
with load hook pivoted

max. load

1324 T/F	1424 T/F	1524 T/F	1624 T/F	-
80 kg	160 kg	400 kg	800 kg	-

Rollers suitable for max. ambient temperature 100° C – standard
Rollers suitable for max. ambient temperature 250° C – “design K”

Loading Criteria
Load carriers - standard

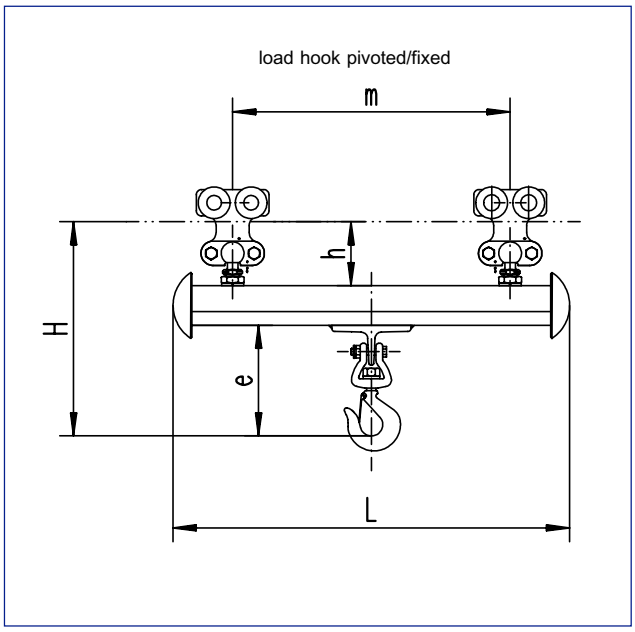

Load carriers 1324 – 1724

Profile	300	400	500	600	700
L	300	450	600	700	1000
m	180	300	420	500	700
h min.	65	77	98	126	137
e	165	165	165	184	186
H	266	286	323	385	433
load hook	LA-24/1-450	LA-24/1-450	LA-24/1-450	3-100-2000	3-100-2000
max.load (kg)	80	180	400	800	1600

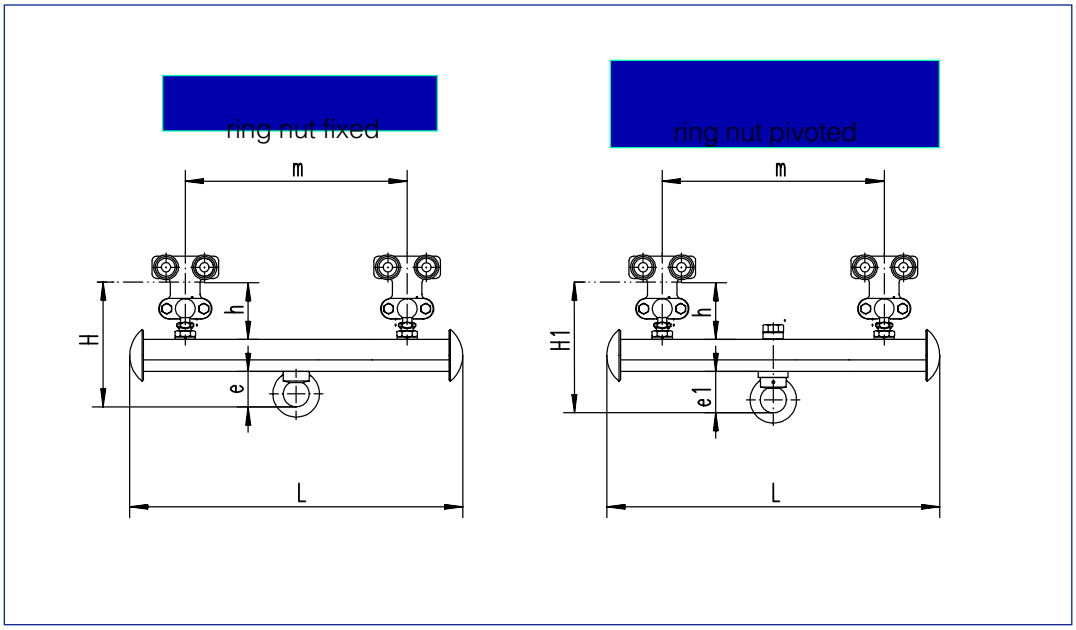

Load carriers 1324 – 1724

Profile	300	400	500	600	700
L	300	450	600	700	1000
m	180	300	420	500	700
h min.	65	77	98	126	137
e	41	48	55	70	85
e1	46	56	65	85	170
H	142	169	213	271	332
H1	147	177	223	286	417
Ring nut					
DIN 582	M12	M16	M20	M24	M30

Buffer Jackets and Joint Rings

The buffer jacket
is made of steel (ill. 1) and ensures optimal continuous rolling of clashing load carriers in bends and switches. However, they can only be used for taverse lengths (L) that do not exceed the radius (r) of the bends (ill.2)

ill. 1

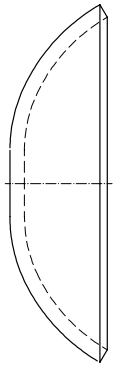

ill. 2

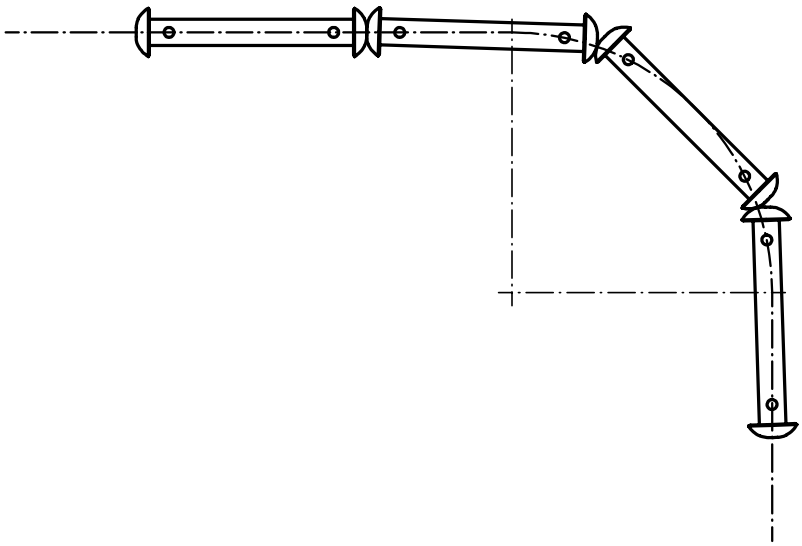

The joint ring
(ill. 3) is used when the traverse length (L) is larger than the radius of the bends (ill. 4)

ill. 3

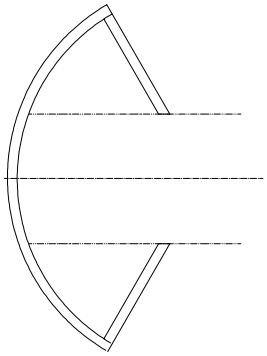

ill. 4

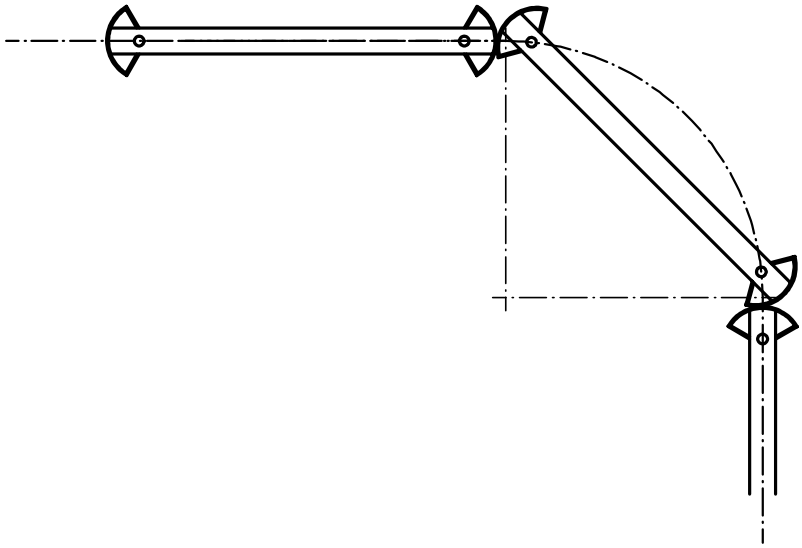

Technical Specifications
HELM track suspension examples

Standardized suspension variants

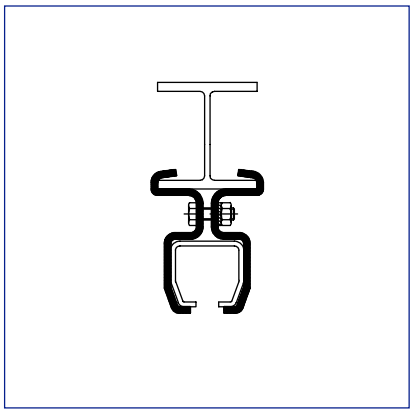

Suspensions

Clamp support bracket
nos. 1305-1705
for I 80 –I 260

Split support bracket
nos 1308-1708

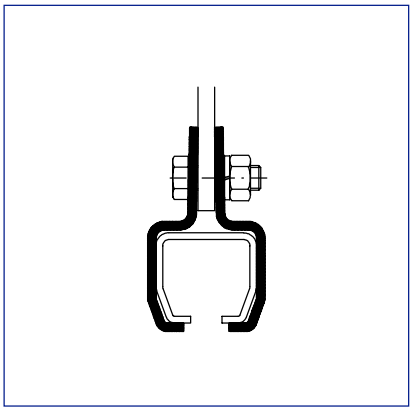

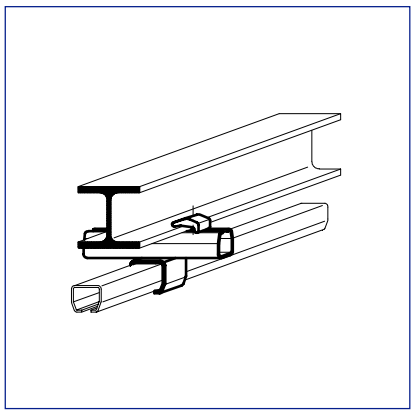

Suspension assembly
nos. 1302-1702
design ‚A'

Suspension assembly
nos. 1302-1702
design ‚B'

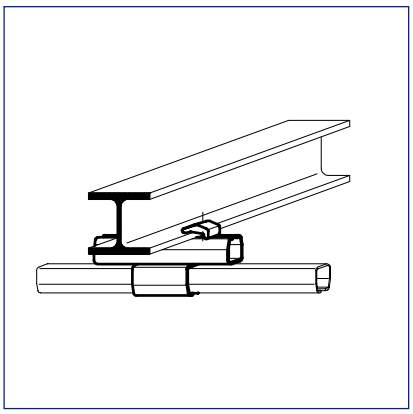

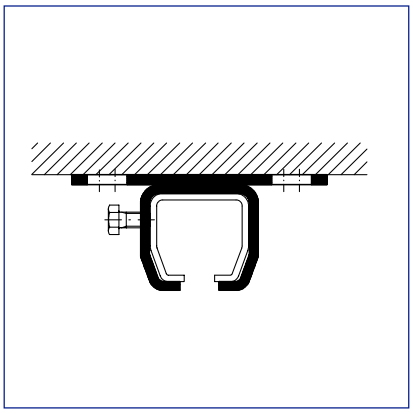

ceiling support bracket
nos. 302-702

Technical Specifications
HELM track suspension examples

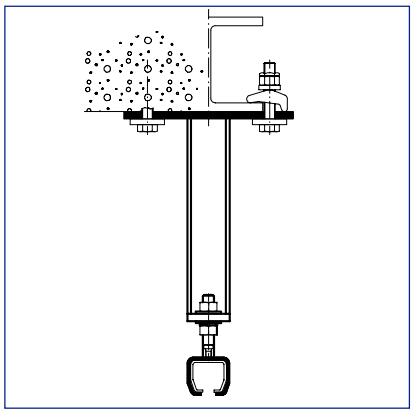

height-adjustable
special suspension

double ceiling
support bracket
nos. 302-502D

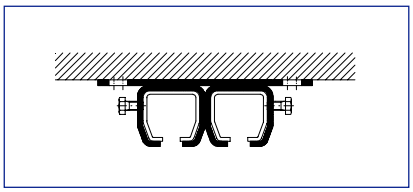

double wall bracket
nos. 301-501D

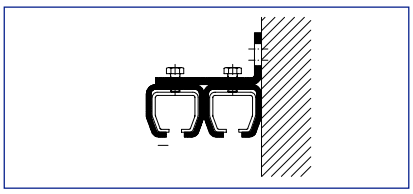

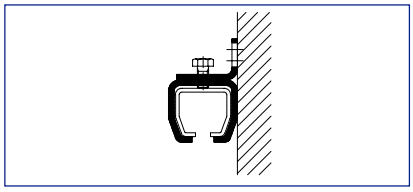

wall bracket
nos. 301-701

angle fixation
nos. 404 W / 604 W with
height-adjustable bracket
nos. 304-704

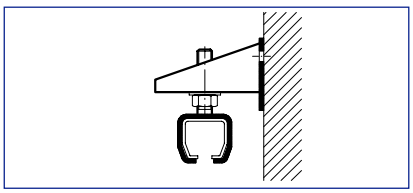

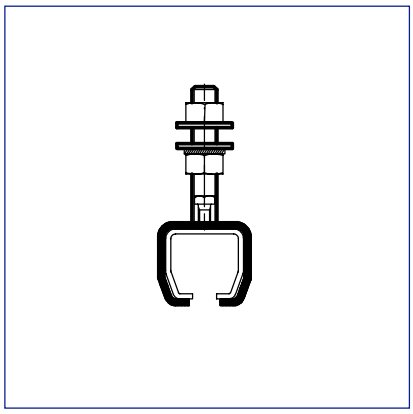

height-adjustable bracket
nos. 304-704

double angle fixation
nos. 404 WD / 604 WD / 704 WD

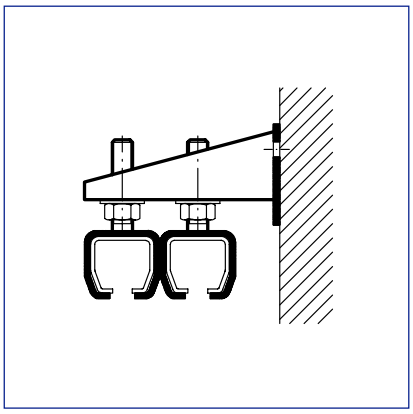

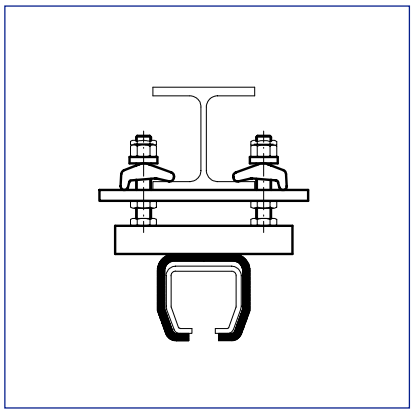

height-adjustable
suspension assembly
nos. 1309-1709

height-adjustable
ceiling support
bracket no. 404

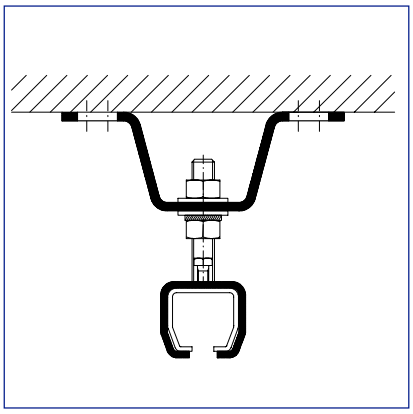

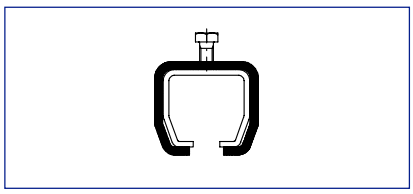

slide-on bracket
nos. 1304-1704
(welded sleeve)

HELM track suspension examples

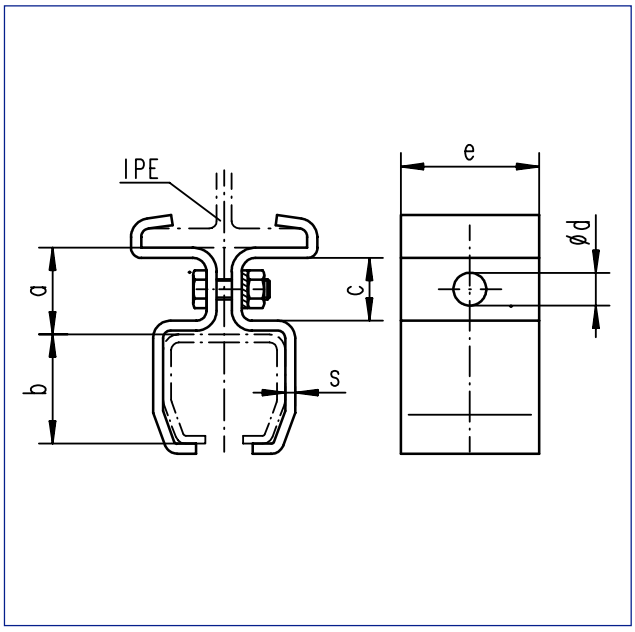

Track	300	400	500	600	700
HELM no.	1305	1405	1505	1605	1705
a	34	34	56	63	90
b	35	44	60	75	110
c	25	25	42	46	-
ød	9	9	17	17	17
e	55	55	90	110	120
s	4	4	6	8	10
hexagon bolt	M8	M8	M16	M16	M16
I-profile DIN 1025-1	IPE profile DIN 1025-5 (EN 10 – 57)				
I 120	IPE 100	IPE 100	IPE 120		
I 140	IPE 120	IPE 120		IPE 140	
I 160		IPE 140	IPE 140 and		
I 180		IPE 160	IPE 160	IPE 160 and	
I 200		IPE 180	IPE 180	IPE 180	
I 240			IPE 220	IPE 220	IPE 180
I 260			IPE 240		

Clamp support bracket 1305 – 1705 for IPE, DIN1025-5

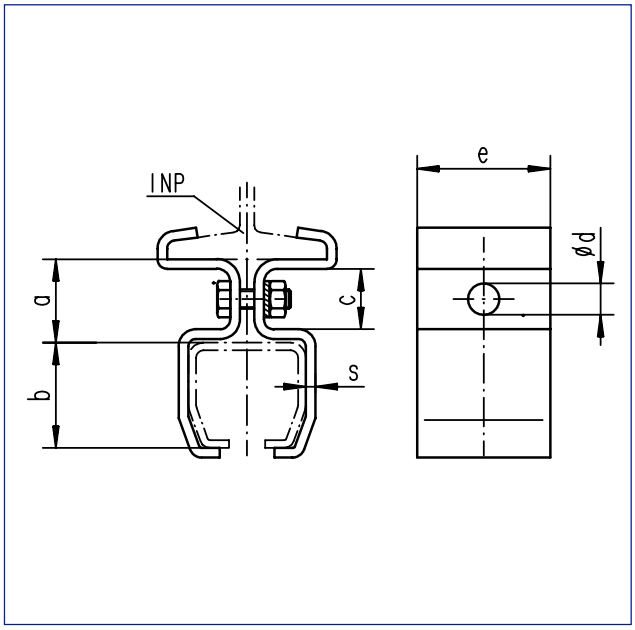

Track	300	400	500	600	700
HELM no.	1305	1405	1505	1605	1705
a	34	34	56	63	90
b	35	44	60	75	110
c	25	25	42	46	-
ød	9	9	17	17	17
e	55	55	90	110	120
s	4	4	6	8	10
hexagon bolt	M8	M8	M16	M16	M16
I-profile DIN 1025-1					
I 80	•				
I 100	•	•			
I 120	•	•	•		
I 140	•	•	•	•	
I 160		•	•	•	
I 180		•	•	•	
I 200		•	•	•	•
I 240			•	•	•
I 260			•	•	

Clamp support bracket 1305 – 1705 for INP, DIN 1025-1

Split support bracket 1308 – 1708

		a	b	c	ød	e	f	s	l	hexagon bolt
300	1308	40	55	16	13	24	8	4	88,5	M12
400	1408	48,5		22		24,5			98,5	
500	1508	65	90	25	17	32	10	6	131	M16
600	1608	80	110	30				8	151	
700	1708	90	120				16	10	192	

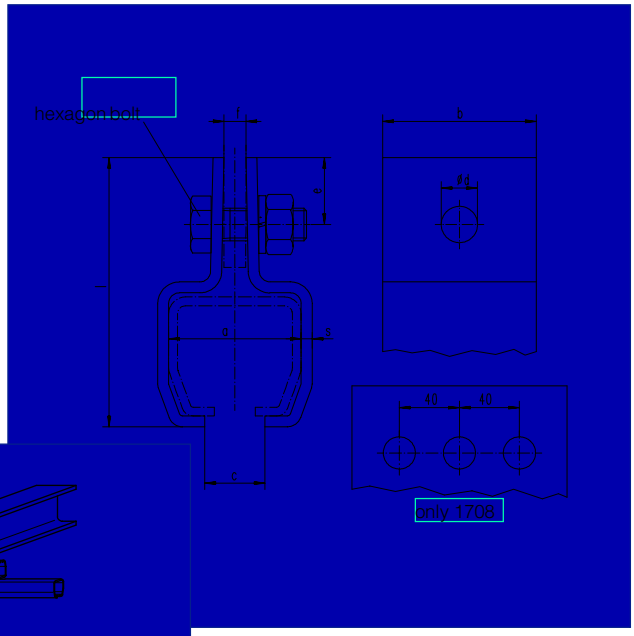

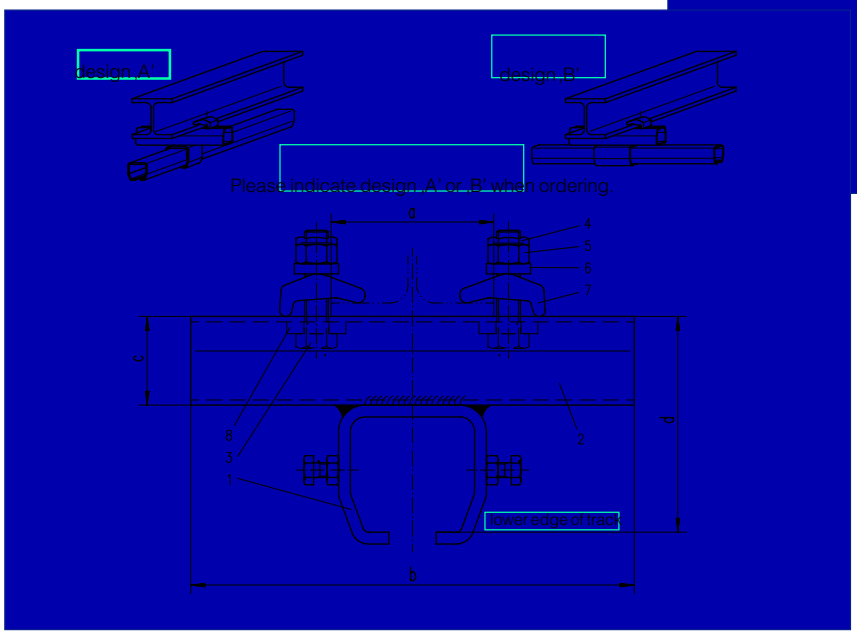

Suspension assembly
nos. 1302 – 1702
Design ‚A' and ‚B'

Profile	300	400	500	600	700
suspension assembly	1302	1402	1502	1602	1702
weight ca. kg	2.000	2.160	4.600	5.600	6.900
pos. 1	1304	1404	1504	1604	1704
pos. 2	Profile 400		Profile 500		Profile 600
pos. 3	M12 x 60 DIN 933-8.8		M16 x 70 DIN 933-8.8		M20 x 110 DIN 933-8.8
pos. 4	M12 DIN 7967		M16 DIN 7967		M20 DIN 7967
pos. 5	M12 DIN 934		M16 DIN 934		M20 DIN 934
pos. 6	A14 DIN 7989		A18 DIN 7989		A22 DIN 7989
pos. 7	1306		1506		1706
pos. 8	30 x 30 x 8		40 x 40 x 8		50 x 60 x 10
a mm	150		175		205
b mm	250		300		330
c mm	44		60		75
d mm	85	94	129	146	199
hexagon bolt and nut	M 8 x 20			M10 x 25	M12 x 30

Technical data sheets
HELM track suspension examples

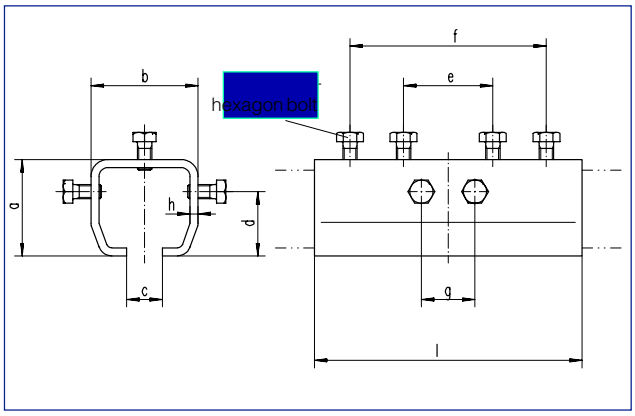

Splice joint 1303 – 1703

		a	b	c	d	e	f	g	h	l	hexagon bolt
300	1303	45,5	50	16	26	46	98	28	4	120	
400	1403	54	60	20	36	50	110	30	4,5	150	M8
500	1503	75	80	25	47	50	140	45	6	180	
600	1603	94	100	32	50	50	140	45	8	200	M10
700	1703	134	114	38	84	100	200	50	10	250	M12

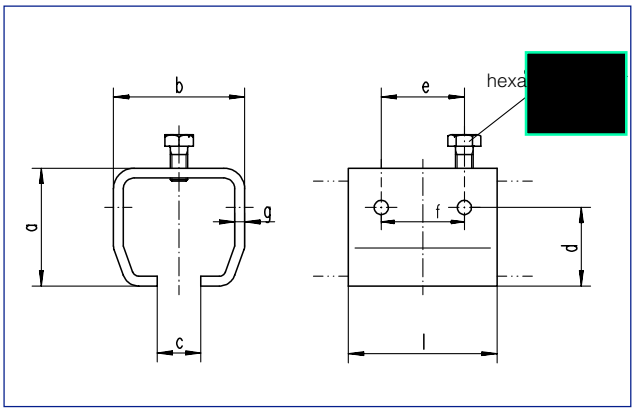

Ceiling support bracket 302 – 702

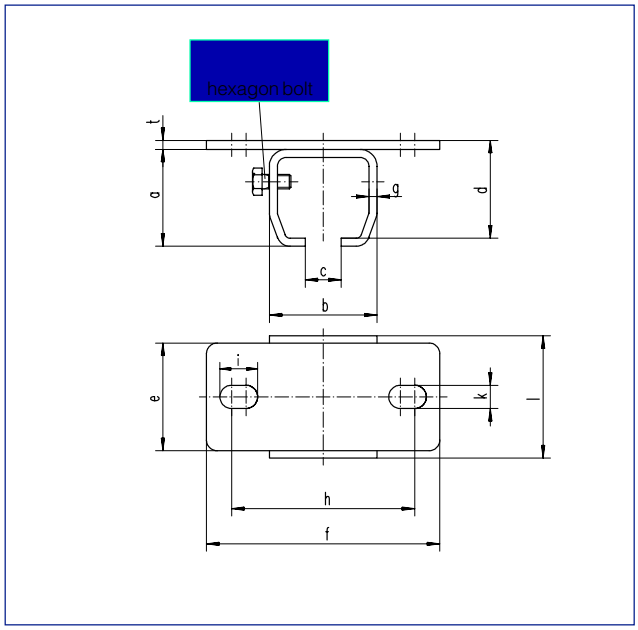

Slide-on bracket 1304 – 1704

		a	b	c	d	e	f	g	l	hexagon bolt
300	1304	45,5	50	16	26	29	-	4	55	
400	1404	54	60	20	36	38	-	4,5	68	M8
500	1504	75	80	25	47	50	-	6	90	
600	1604	94	100	32	50	50	45	8	110	M10
700	1704	134	114	38	84	60	-	10	120	M12

		a	b	c	d	e	f	g	h	i	k	t	l	hexagon bolt
300	302	45,5	50	16	45,5	50	115	4	88	18	11	4	55	
400	402	54	60	20	54.5	60	130	4,5	102	21	13	5	68	M8
500	502	75	80	25	75	89	170	6	133	27	17	6	90	
600	602	94	100	32	96	100	210	8	160	34	22	10	110	M10
700	702	134	114	38	136	120	260	10	202	45.5	22	12	120	M12

Technical data sheets
HELM track suspension examples

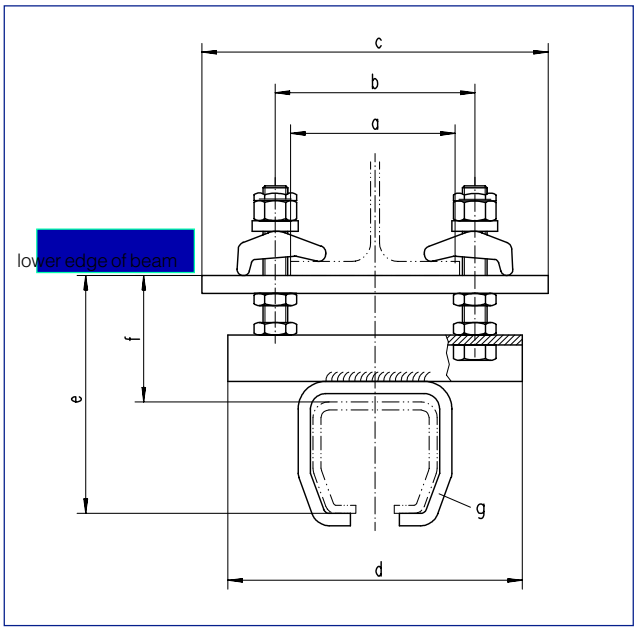

	a	b	c	d	e	f	g
300	beam size	a+15	a+65	a+45	69 ±5	34 ±5	1304
400					78 ±5	34.5 ±5	1404
500		a+18	a+78	a+54	116 ±7	56 ±6	1504
600		a+20	a+98	a+68	138 ±8	63 ±8	1604

Height-adjustable
suspension assembly 1309 – 1709

Height adjustable bracket 304 - 704

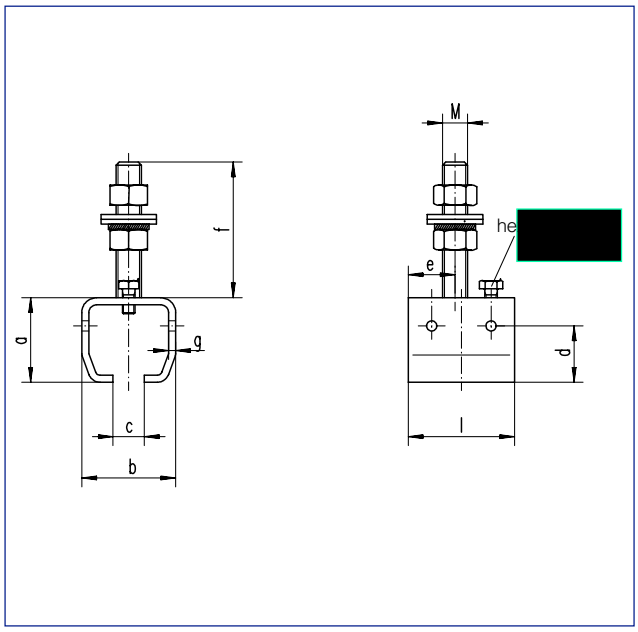

		a	b	c	d	e	f	M	g	L	hexagon bolt
300	304	45,5	50	16	26	22,5	87	M16	4	55	M8
400	404	54	60	20	36	30			4,5	68	
500	504	75	80	25	47	41,5	133	M20	6	90	
600	604	94	100	32	50	48			8	110	M10
700	704	134	114	38	64	45	189	M30	10	120	M12

Height-adjustable ceiling support bracket 404

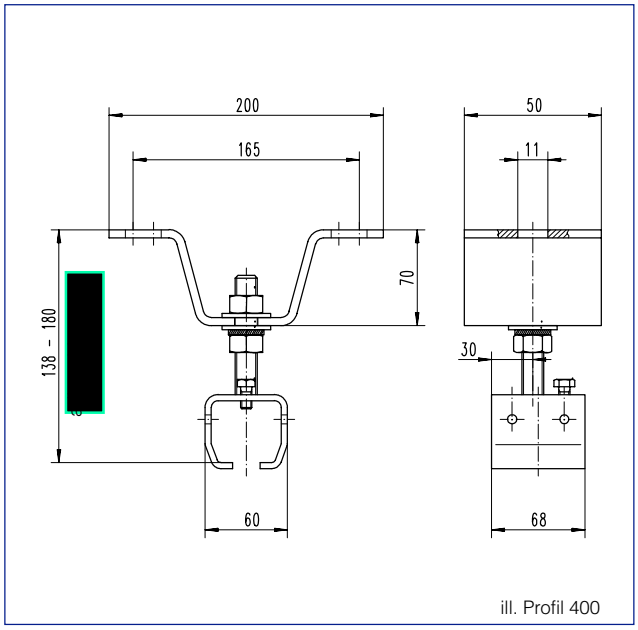

ill. Profil 400

Technical Specifications
HELM track suspension examples

Varying on-site conditions require different track suspensions. A few examples are listed below.

1. Assembly suspension (assembly material)

Suspension from a reinforced concrete ceiling
– dowelled –

The following assembly material will be included in the delivery of each 10 m manual overhead conveyor unit, if no other type of track suspension is selected:

42m	suspension tube
22 pcs.	eye bolt M 10x140/rs/ls
22 pcs.	thread plug M 10 rs/ls
22 pcs	screw down angles
12 pcs.	hexagonal bolt M 10x70 Mu
22 pcs.	hexagonal bolt M 10x30 Mu
34 pcs.	hexagonal locknut M 10
12 pcs.	spacer
3 pcs.	inserters
12 pcs.	adapter

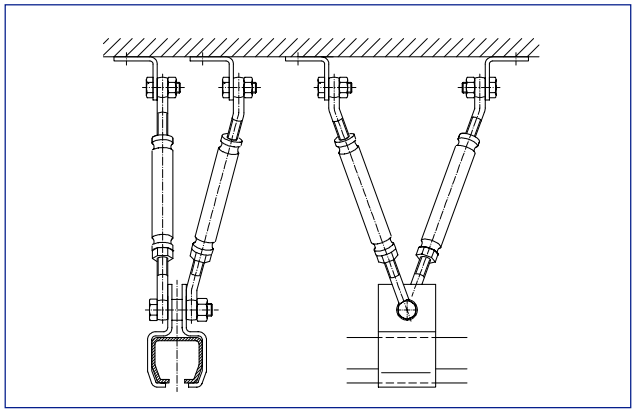

For concrete suspensions the following items are also required (number of items depend on required quantities):

- Zykon-Anker FZA 14x40, M 10
- Special drill for FZUB 14x40
- Cartridge-operated hammer FZE

The following item is available on a loan basis and will be credited to your account when returned to us free of charge:
- Fine-tuning device

For further details please see Group 14 Assembly and Maintenance Instructions.

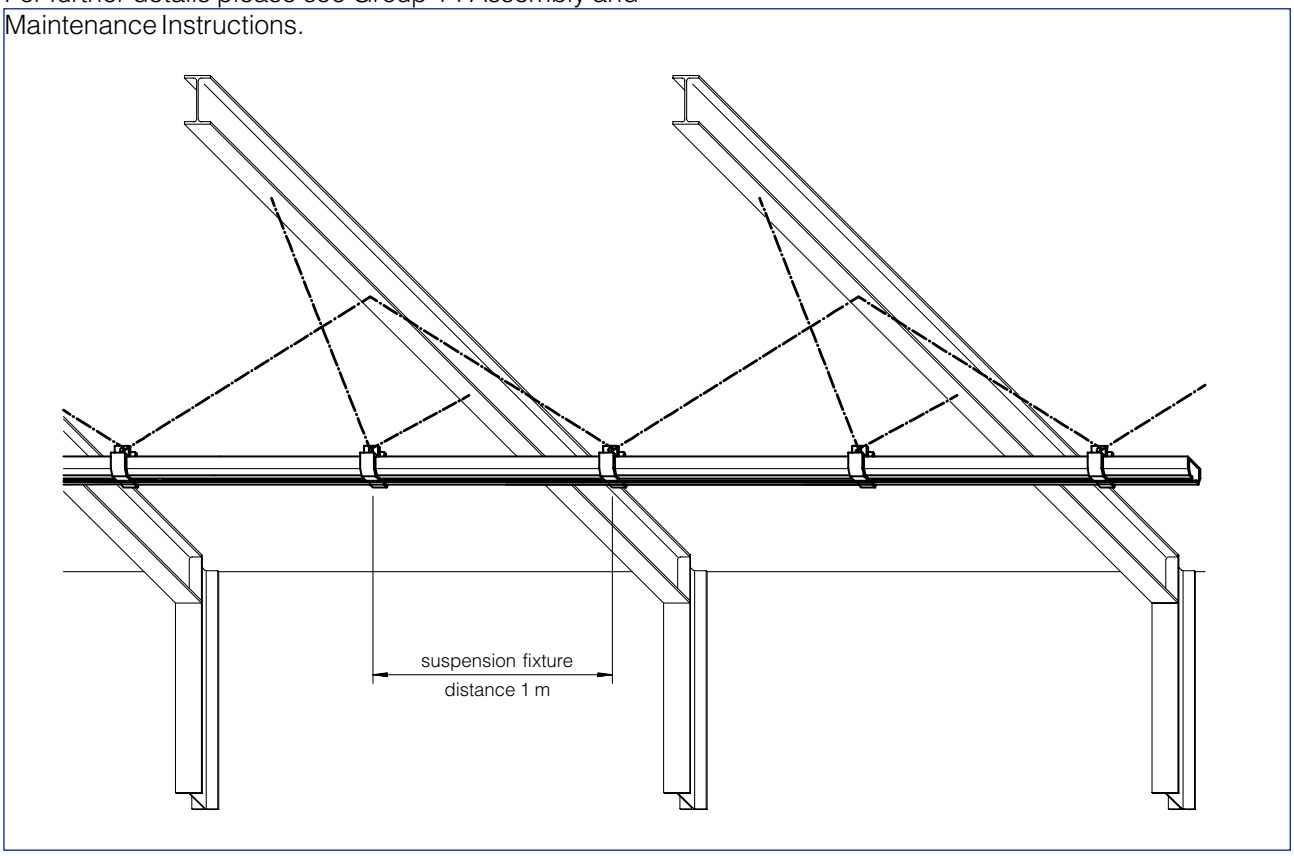

Standard and Special Radii
Track bend profile 300 -700 horizontal

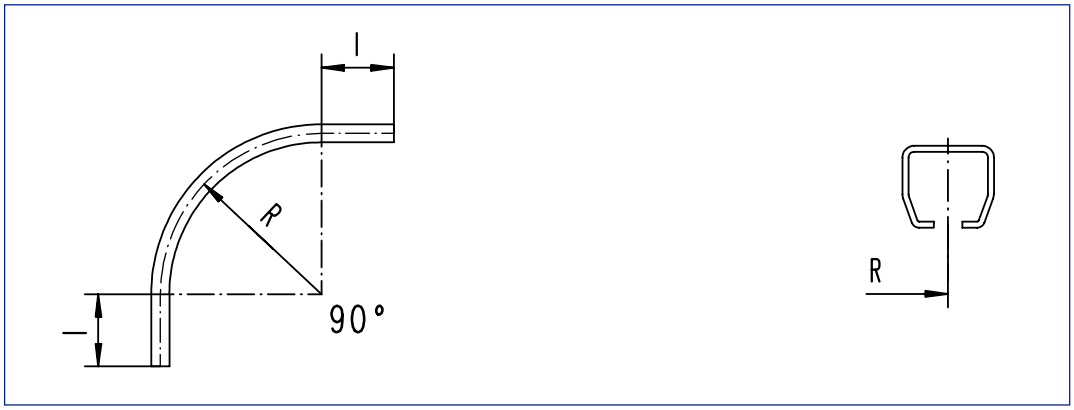

Profile	standard R	available R	R upon request	l ca.
300	630	410 950	< 1000	500
400	610	415 905	< 1200	500
500	605	875	< 1300	500
600	790	-	< 1300	600
700	1035	-	< 1500	700

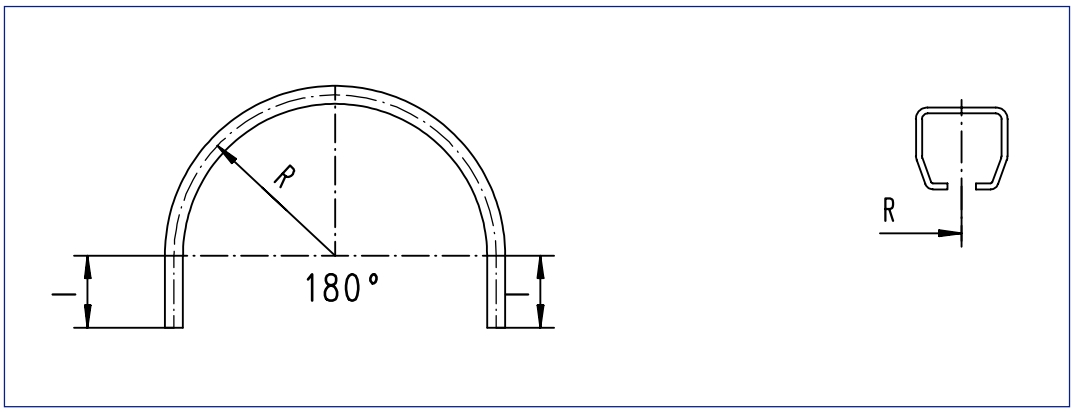

Profile	standard R	available R	R upon request	l ca.
300	630	410	-	500
400	610	415	-	500
500	605	-	-	500

Standard and Special Radii
Track bend profile 300 -700 vertical

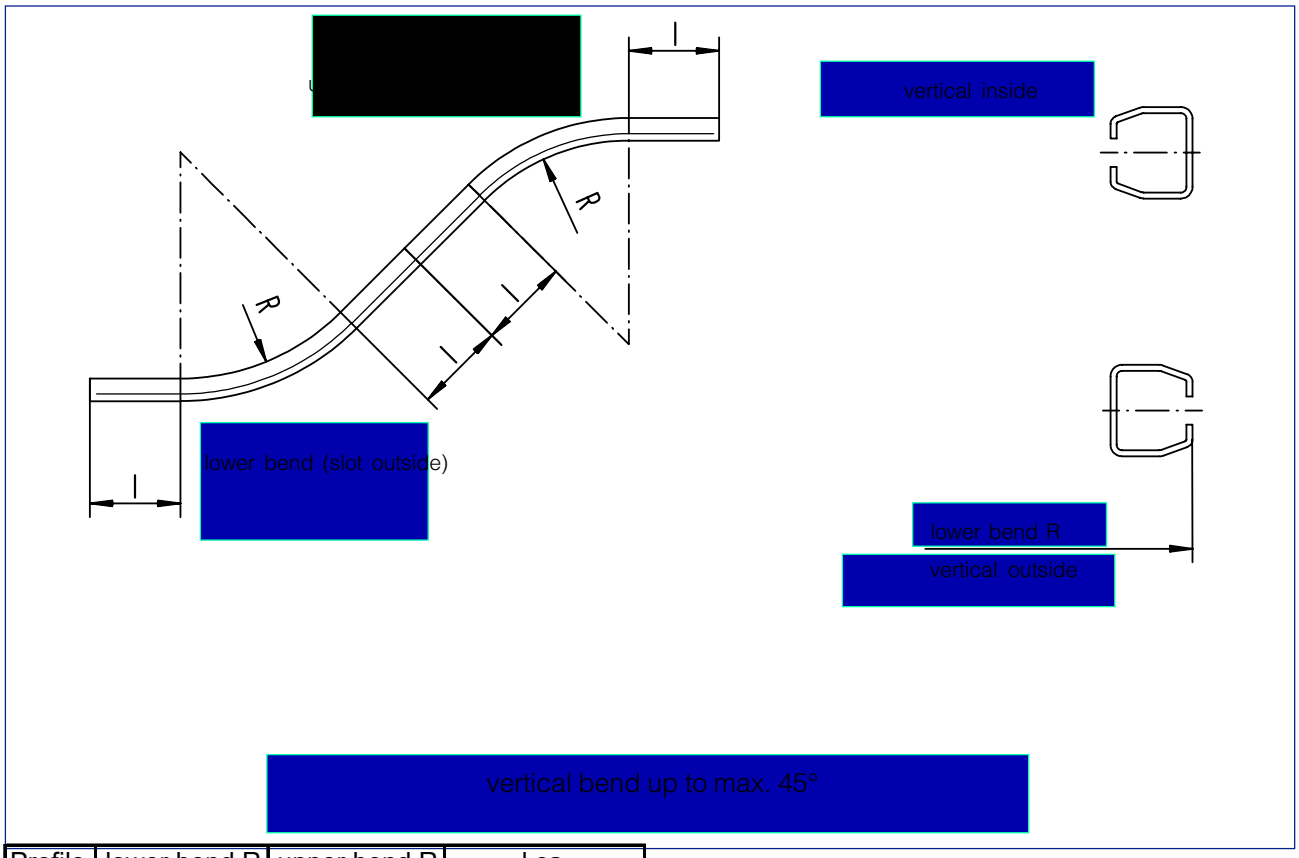

Profile	lower bend R	upper bend R	l ca.
300	415 625 920	390 610 885	500
400	630 895	561 851	500
500	845	790	500
600	1035	990	600
700	1100	990	700

Swivel Switch 1331 -1731 /1333 – 1733

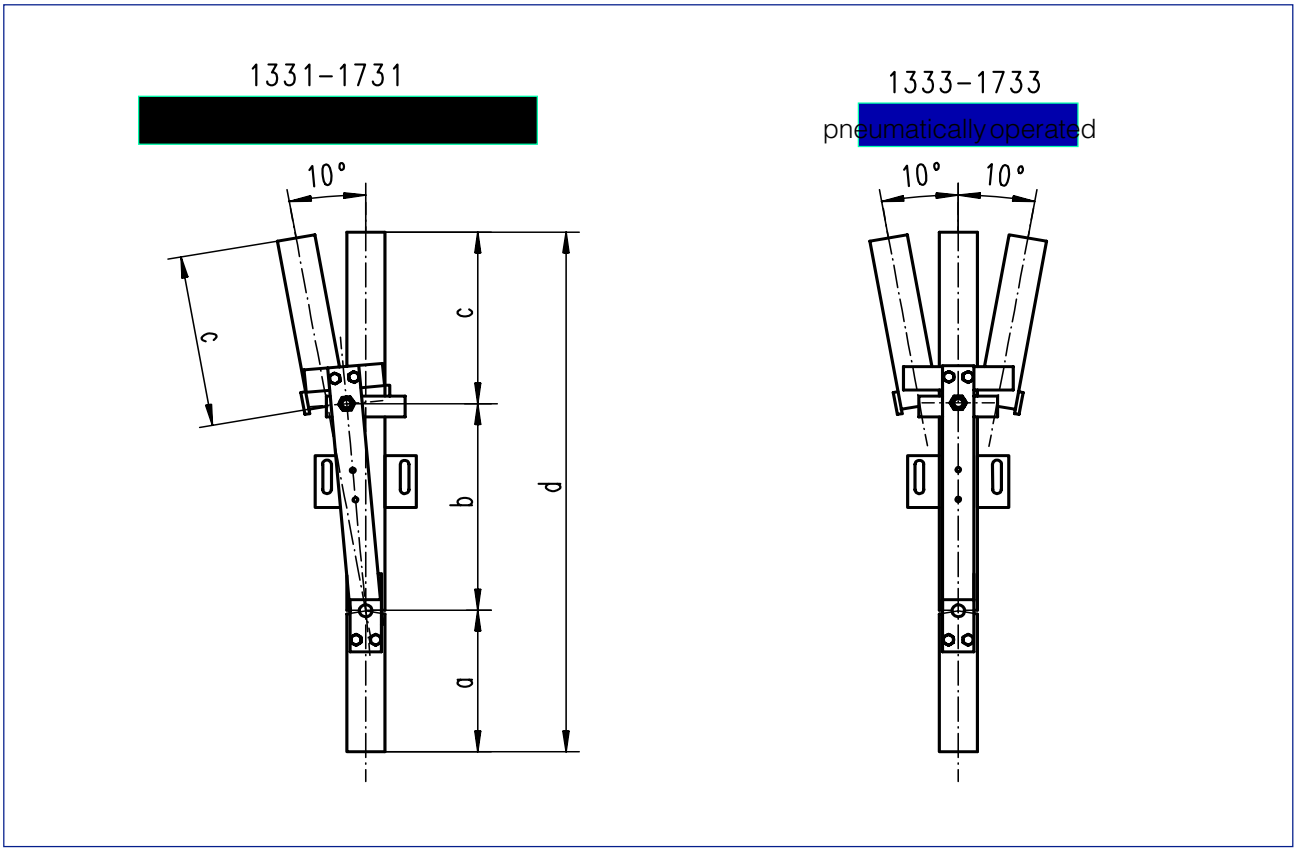

Profile	300	400	500	600	700
a	170	190	250	290	370
b	230	280	370	460	510
c	200	230	280	350	420
d	600	700	900	1100	1300

Switch arm can be operated:

- by switch lever (group 14 / 19)
- by double pulling chain
- pneumatically or electropneumatically via cylinder
- by mechanic remote control

Tongue Switches
Tongue switch single 1331 -1631 Z-A 90

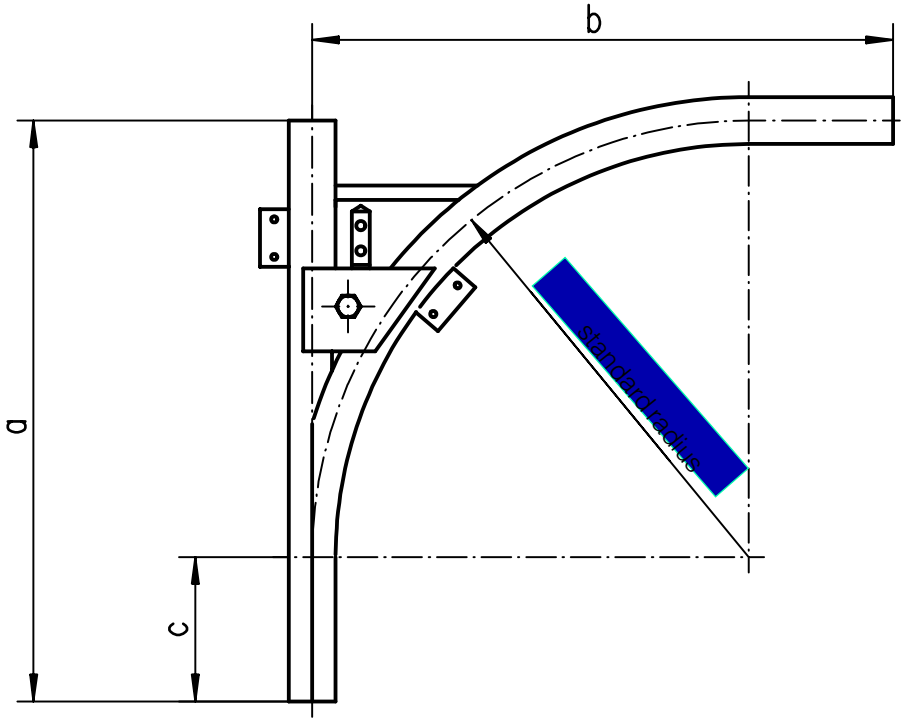

	1331 ZA	1431 ZA	1531 ZA	1631 ZA
length a mm	750	750	900	1100
length b mm	750	750	805	1000
length c mm	140	140	200	210

Designs with special radii are also available.

	Part-No. right	Part-No. left
Tongue switch 1331 ZA	300130131007	300130131006
Tongue switch 1431 ZA	400130131007	400130131006
Tongue switch 1531 ZA	500130131007	500130131006
Tongue switch 1631 ZA	600130131007	600130131006

Switch can be operated using:

	Part.-No. 1331 / 1431	Part-No. 1531 / 1631
double pulling chain	300130007001	500130007001
switch lever	300130008001	500130008001
spring operation	300130009001	500130009001
automatically alternating	300130010001	500130010001
automatically operating	300130011001	500130011001
pneumatic cylinder	300130012002	500130012002

Tongue switch double1332 - 1632 Z-A

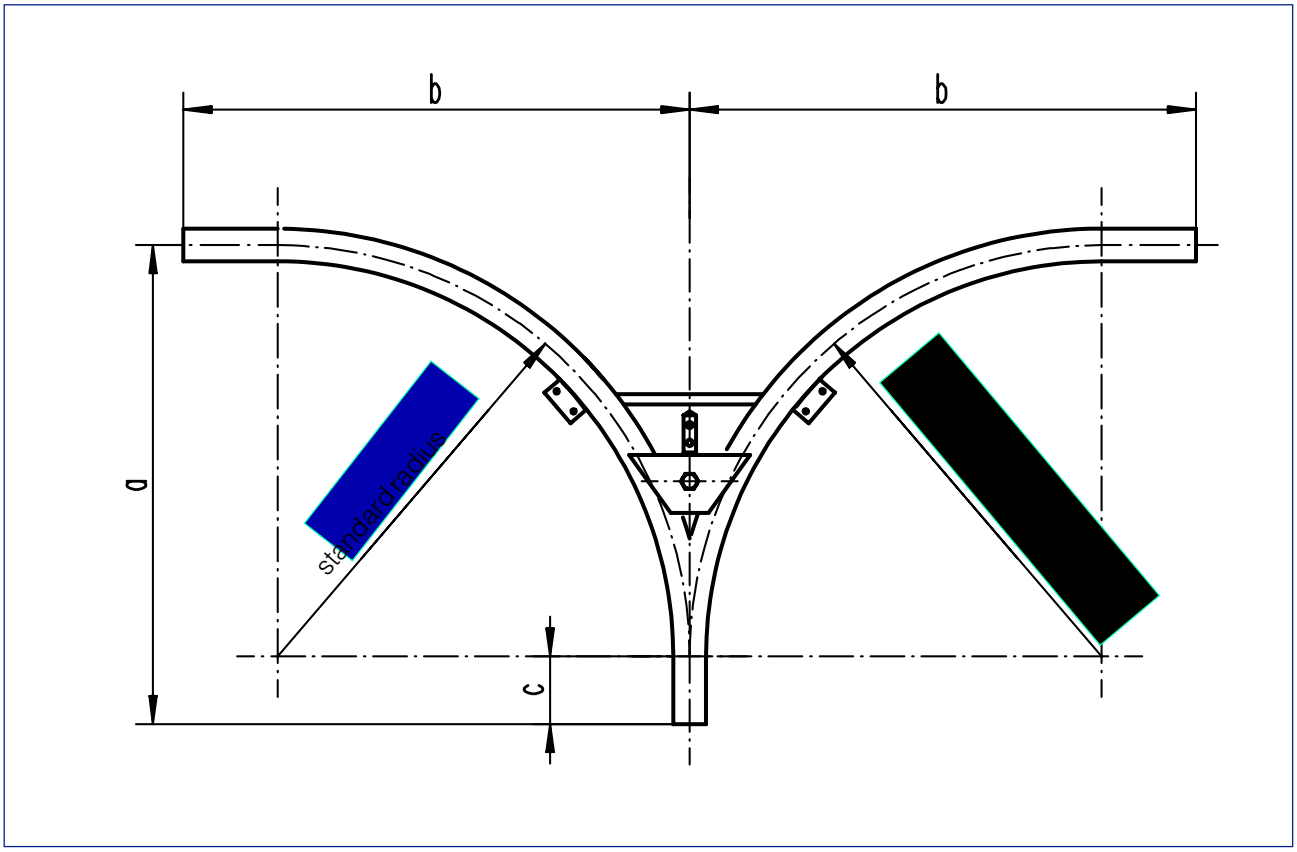

	1332	1432	1532	1632
length a mm	750	750	805	1000
length b mm	750	750	805	1000
length c mm	140	140	200	210

Designs with special radii are also available.

Switch operation see p. 24

Tongue switch combination Z-AP 300 – P 600

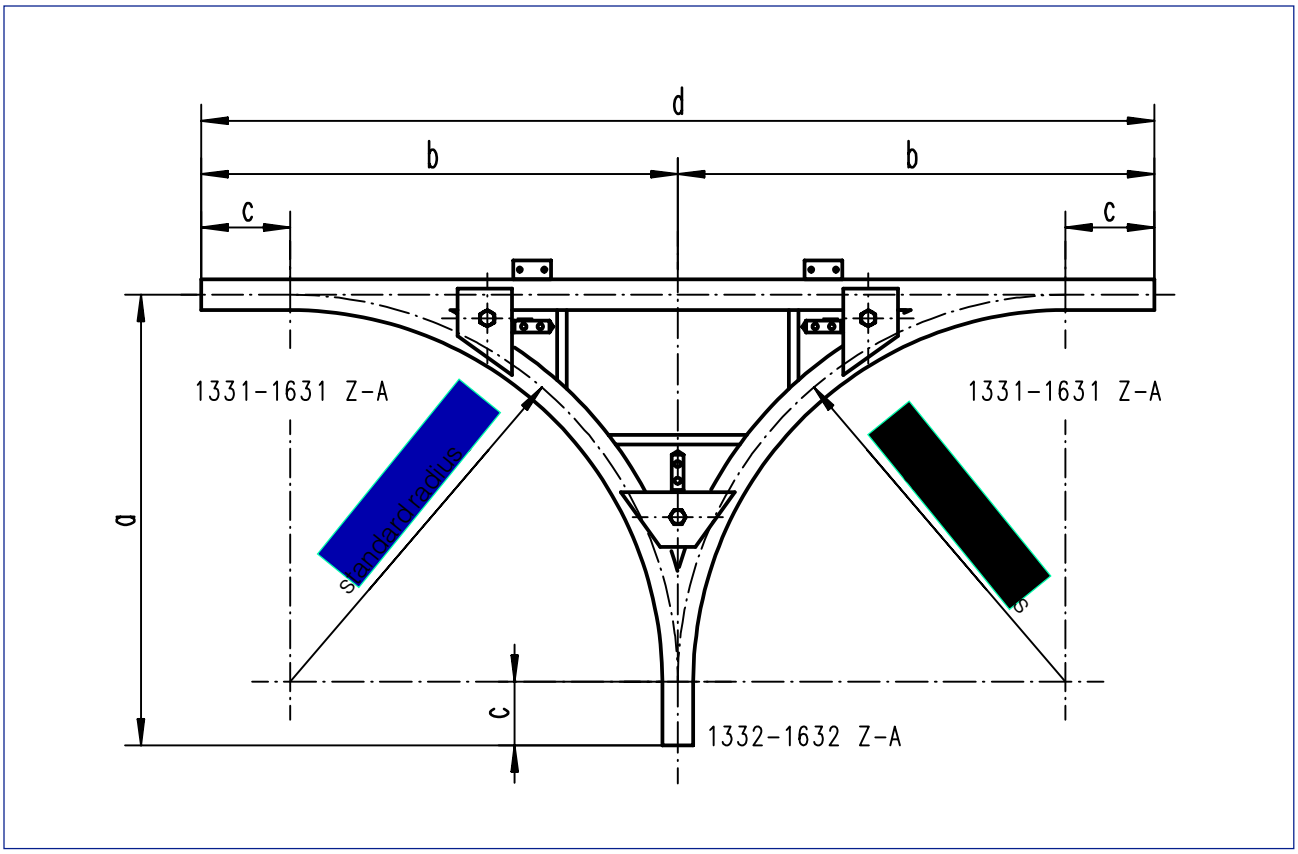

	1332	1432	1532	1632
length a mm	750	750	805	1000
length b mm	750	750	805	1000
length c mm	140	140	200	210

Designs with special radii are also available.

Switch operation see p. 24

Turntable combination
P 300 – P 600

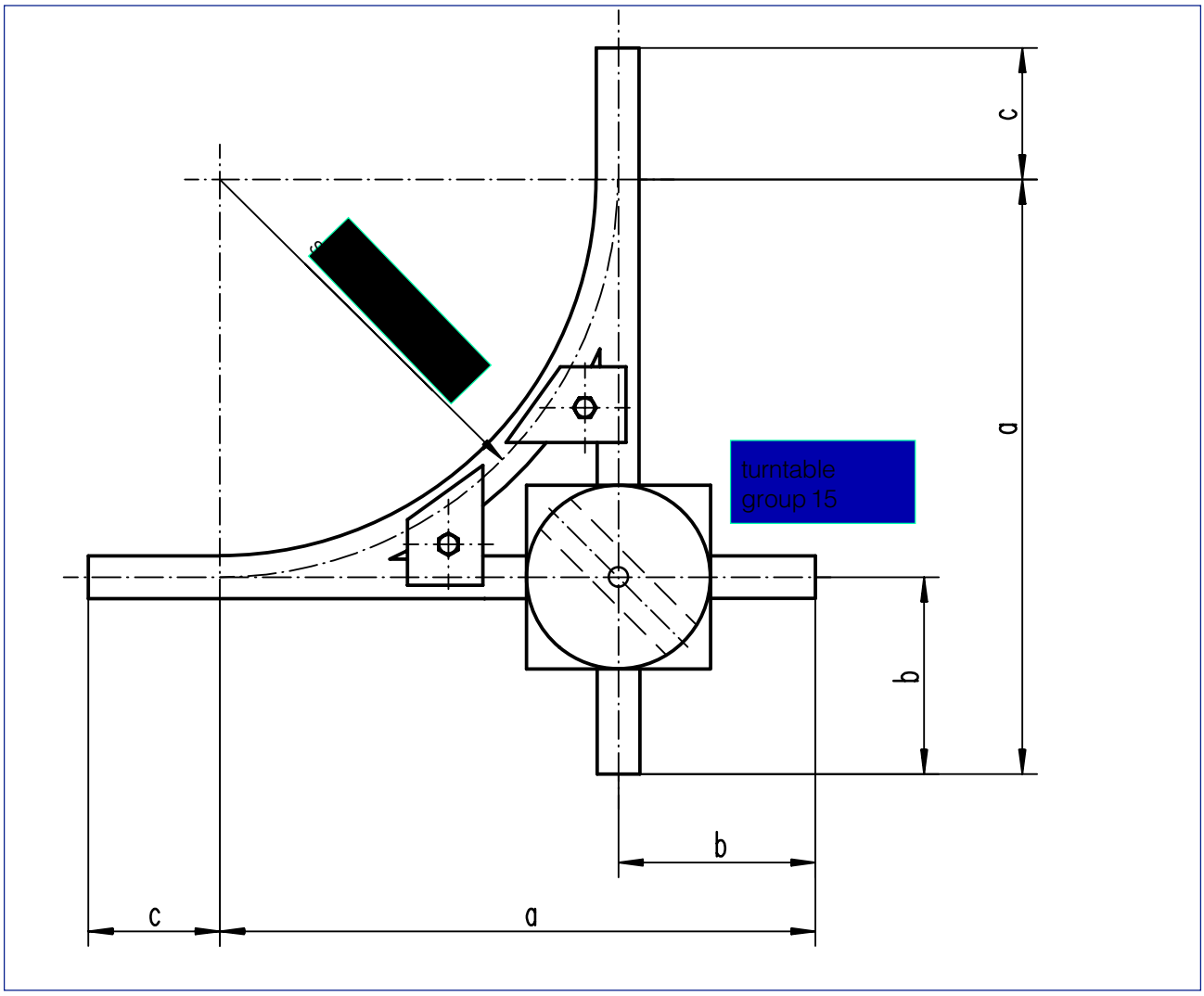

	profile 300	profile 400	profile 500	profile 600
standard radius	630	610	605	790
length a mm	830	810	855	1040
length b mm	200	200	250	250
length c mm	140	140	200	210

Self-controlling Automatic Tongue Switches

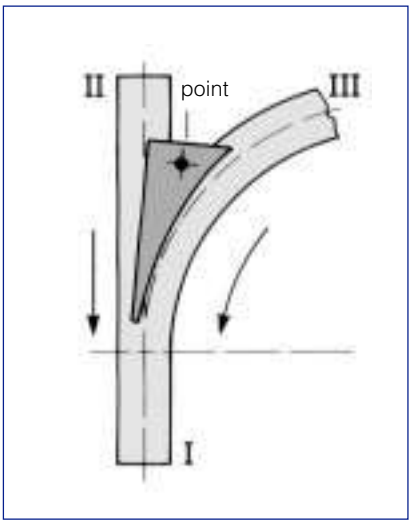

Type A (automatically operating)
freemoving tongue
travel directions II to I
III to I

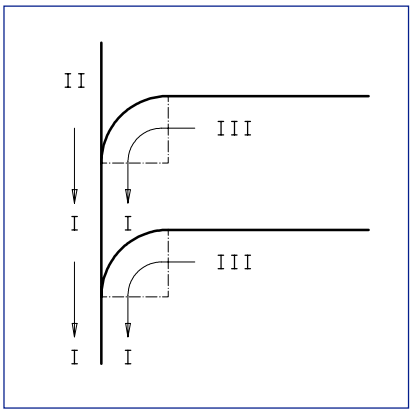

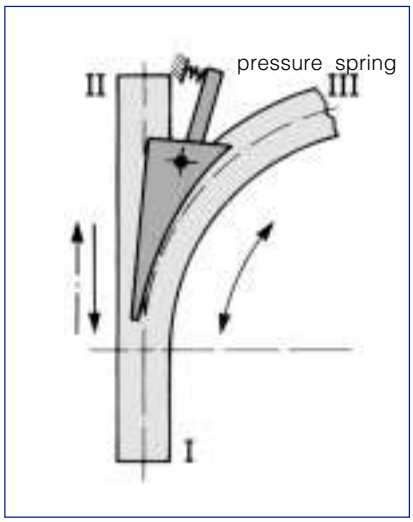

Type B (spring switch)
tongue under spring pressure
travel directions II to I
III to I
I to III
or
adjustable I to II

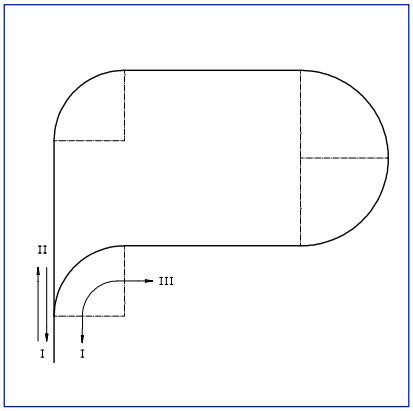

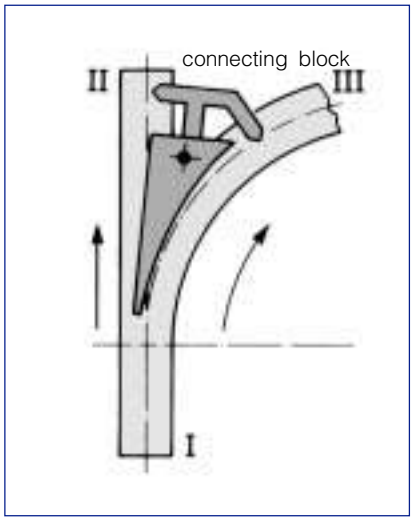

Type C (automatically alternating)
tongue movement by connecting block
travel directions I to III
automatic
change-over to I to II

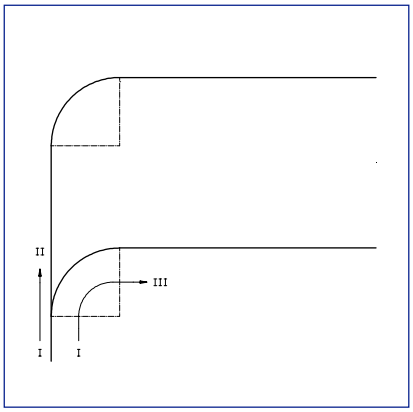

Manually and Remotely Operated Switches

For reasons of construction, manual switch control with levers mounted to the left or right is only possible up to an installation height of 2200 mm. Track networks suspended at a height of more than 2200 mm require double pulling chains. The standard design length (e and e_1 = 500 mm) can be extended to any length.

Using a double pulling chain is also recommended for lower installation heights, if, for example, levers are hindering the conveying of bulky loads.

manual rod control

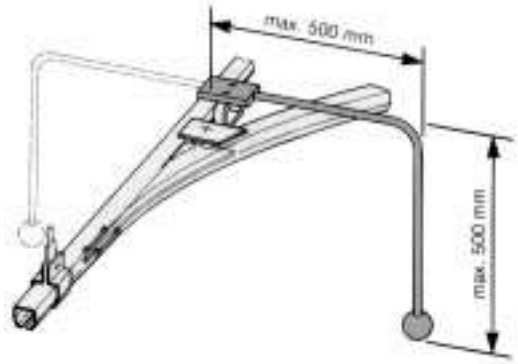

manual double chain hoist control

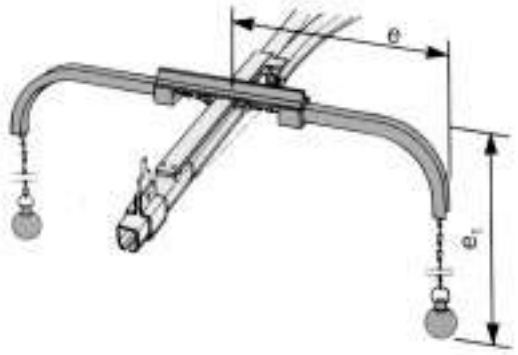

Specialties:

Mechanic remote control

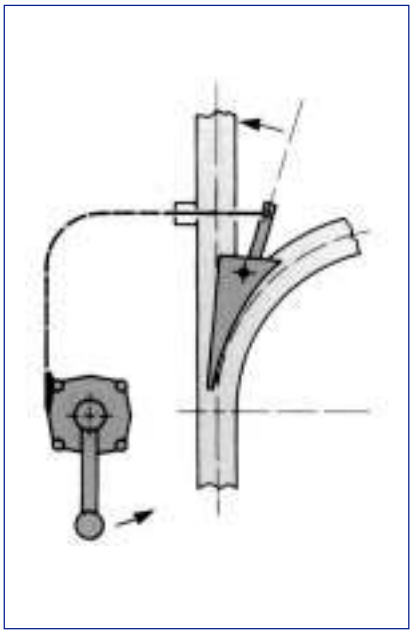

Pneumatic operation (cylinder)

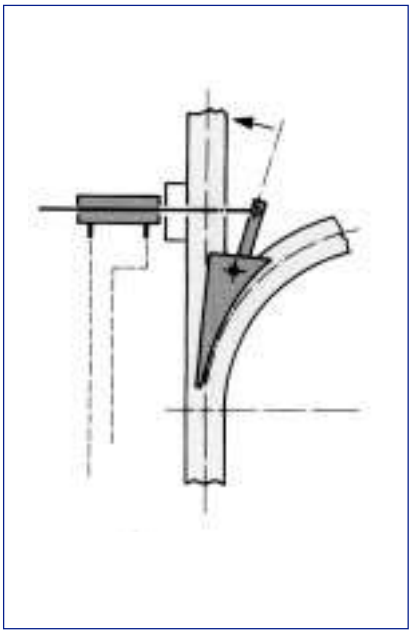

Electric operation (servo motor)

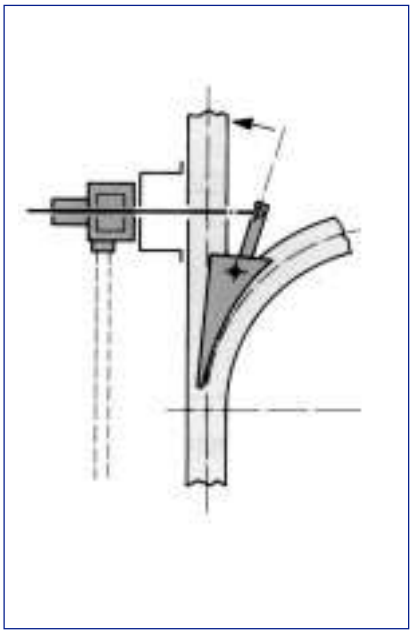

Turntables

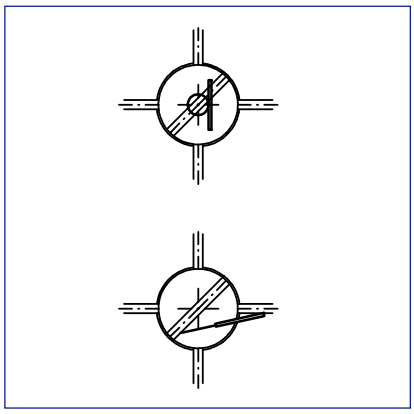

pneumatic operation 180°

pneumatic operation 90°

90° standard design

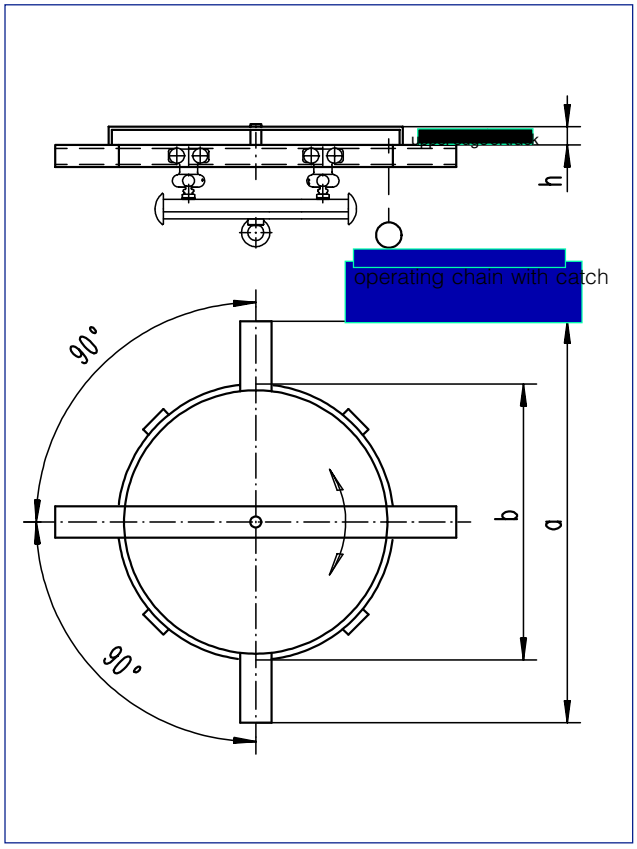

	300 1340	400 1440	500 1540	600 1640	700 1740
a	850	850	1100	1300	1800
b	450	450	600	700	1000
h	34	34	56	63	90

Special design

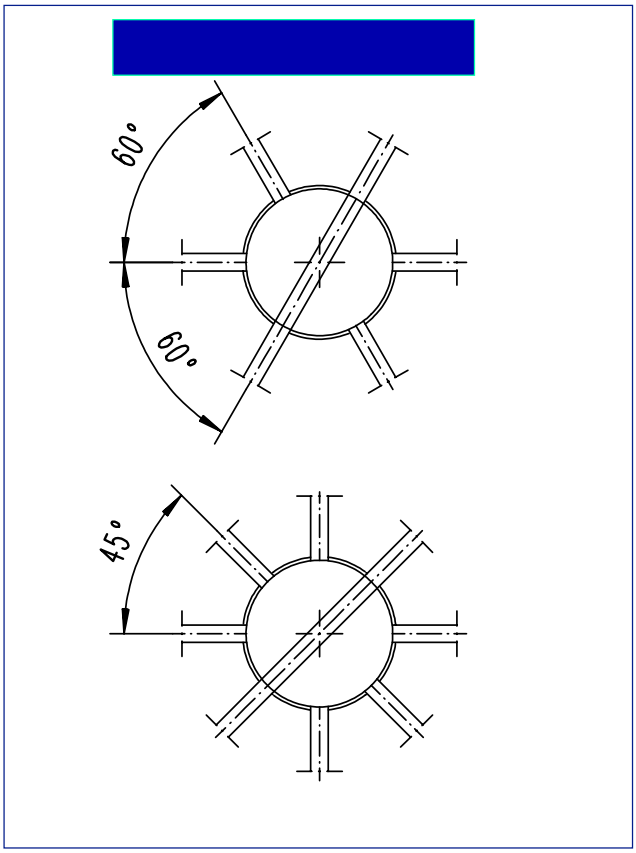

Also available in special sizes

Turntable (Group 15) with Cylinder

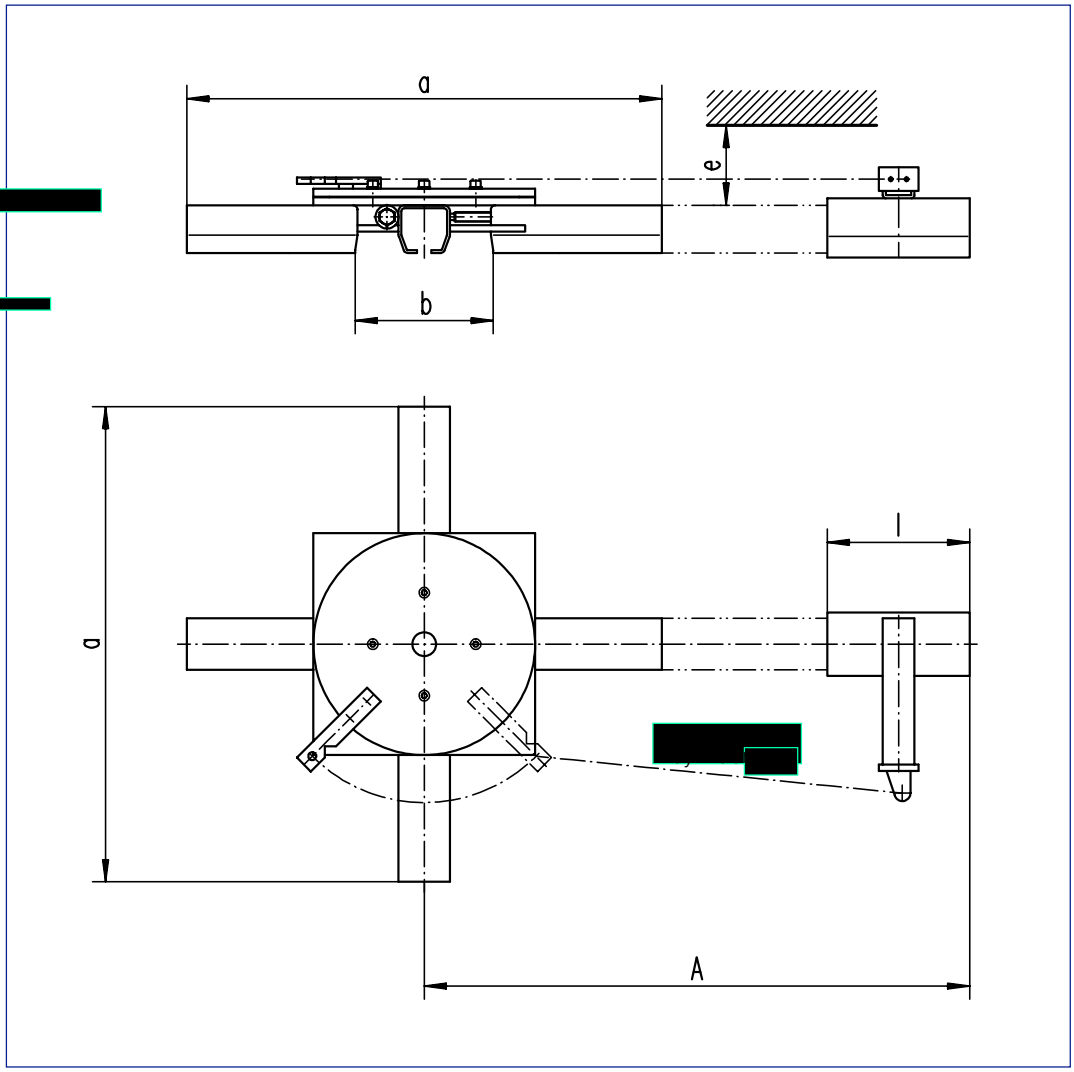

Profile	a	b	e	A	l	Cylinder
300	400	100	34	490	120	Ø 25/200
400				510	150	
500	500	130	56	530	180	
600		170	63	600	200	Ø 25/250

Turntable switch

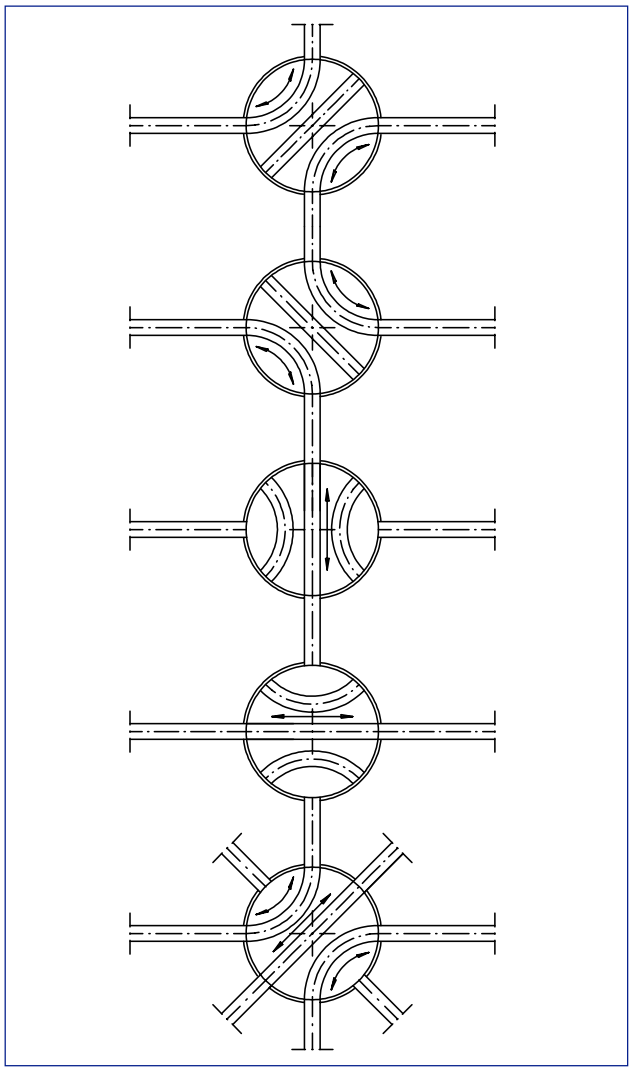

	300 1343	400 1443	500 1543	600 1643	700 1743
a	1300	1300	1800	2200	2800
b	900	900	1300	1600	2000
h	34	34	56	63	90

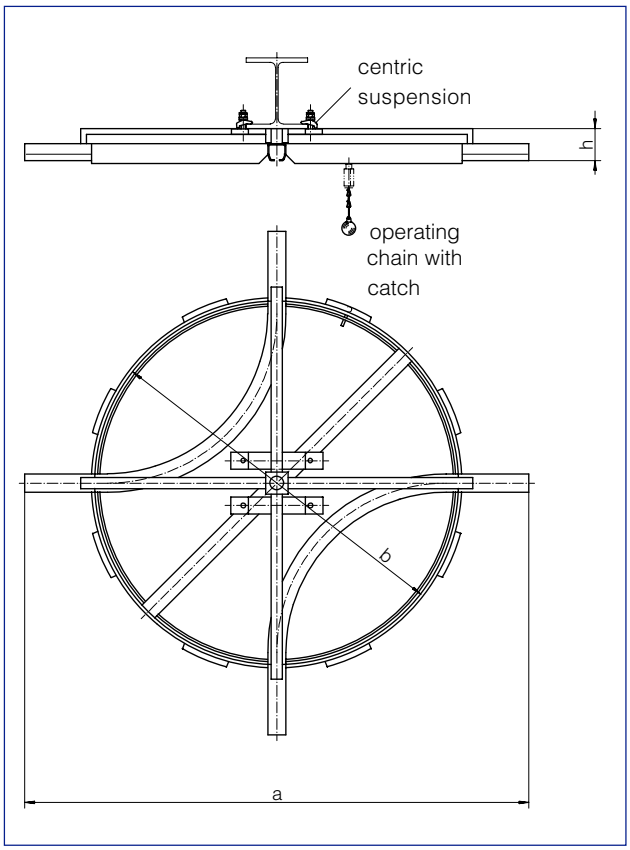

Slide-in device, Swivel Device and End Stop

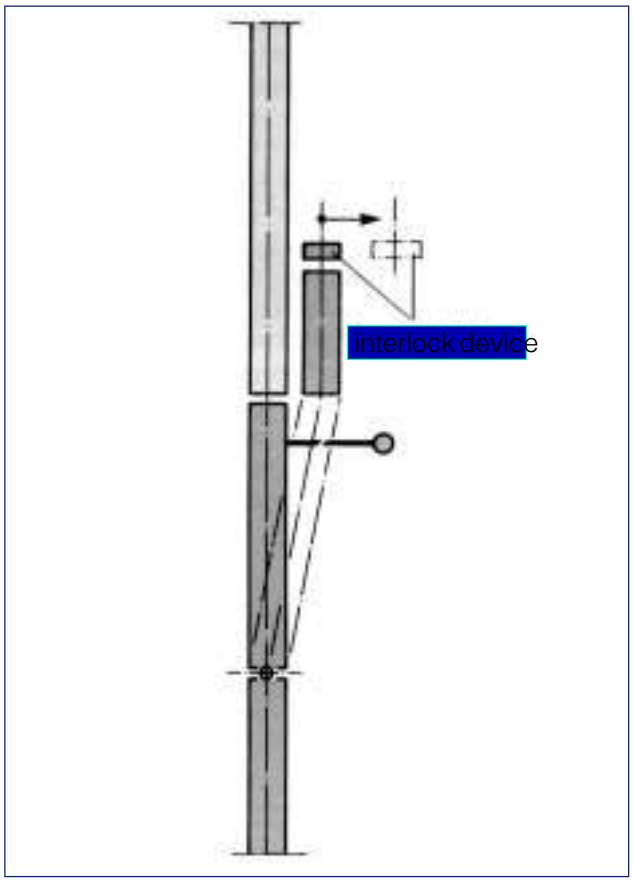

The slide-in device
For the opening of the track network, in order to introduce or remove trolleys and load carriers, the track network allows for slide-in device.
An automatically shutting locking device prevents the falling of trolleys and load carriers while the track section is open.

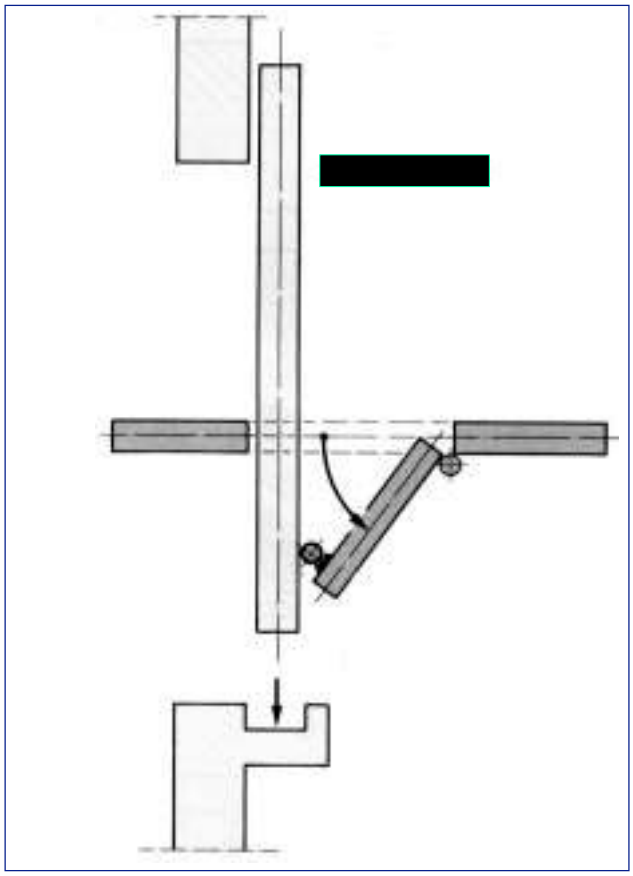

The swivel device
Near sliding doors (cooling chamber doors and fire-resisting doors) the swivel device is mandatory.The sliding door automatically activates an integrated swivel device to provide the necessary gap in the track section. Automatic stops prevent the pulling of load carriers and trolleys from the discontinued track profiles.

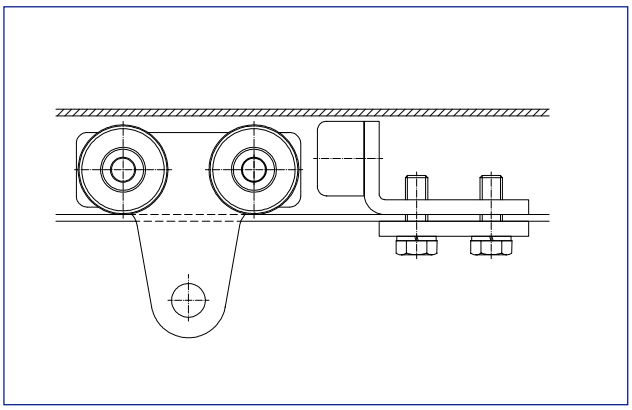

The end stop
Placing a rubber padded stop at the open track ends prevents the load carriers and trolleys from travelling outside the track section.

Loading and Unloading Stations, Power Supply

ill. 1

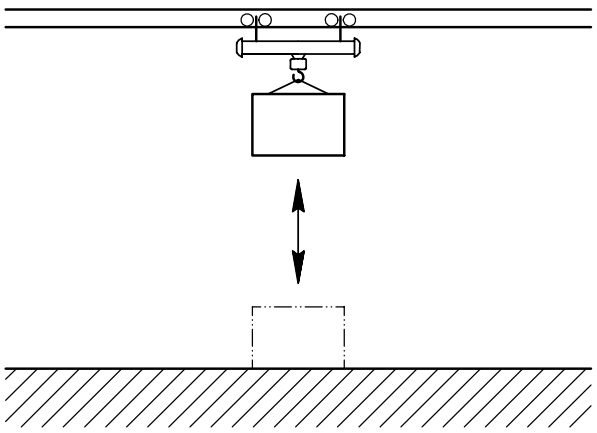

Transport carriages with electric hoisting gear are used for taking up or putting down loads. There are three alternatives at hand:

Stationary loading and unloading stations (ill. 3) for individual carriages equipped with electric hoisting gear. For this, a section of the track network is equipped with conductor kits. Contact with the conductor line is made when the current collector carriage is introduced into the funnel shaped opening (ill. 2). This way, the hoisting gear of the carriage, which is connected to the current collector by a screwed elastic connection, is easily supplied with energy.

ill. 2

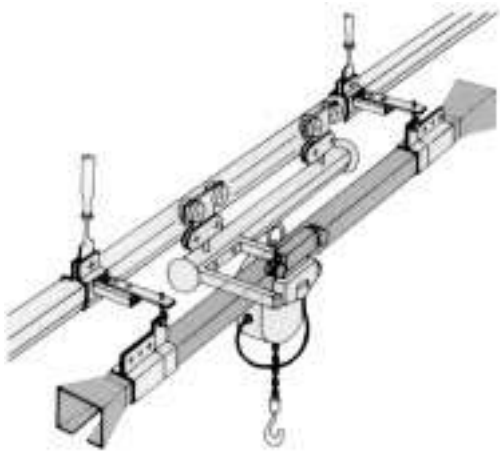

ill. 3

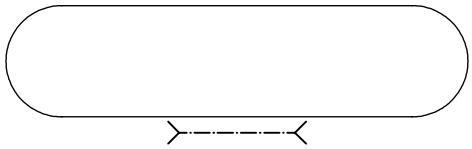

ill. 4

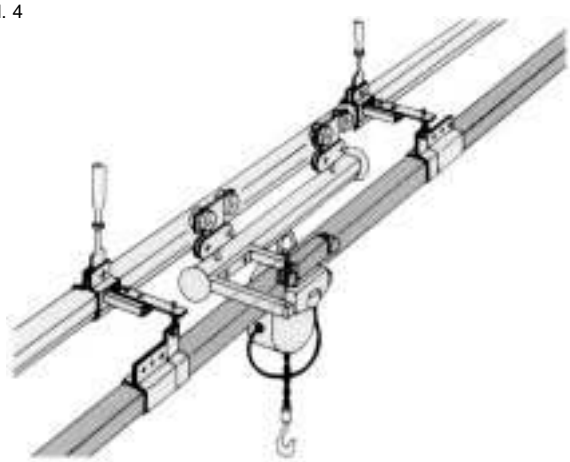

Non-stationary loading and unloading stations require a conductor line along the entire track (ill. 5). Energy supply for the electric hoisting gear is then possible at any point along the track network (ill. 4).

ill. 5

Electric Rail Drive HELM SA 100/150
Profile 600/700

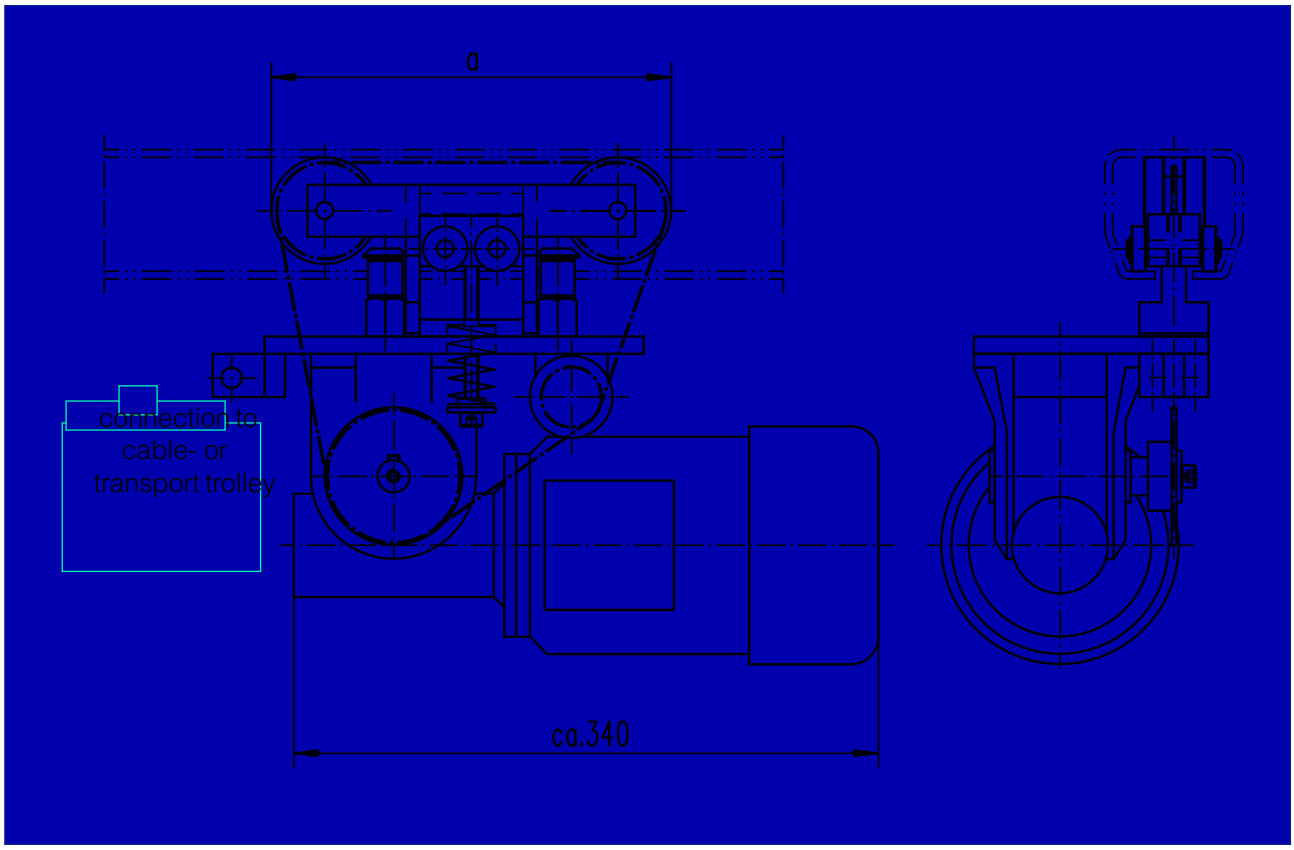

Realization:
Friction roller drive
Top and gearbox galvanized / coated

Application:
Automatic operation of cable or transport trolleys within a manual overhead conveyor system or light crane system.

Notice:
Drive is not curve-going
Pull rods, pull connectors and hangers must be ordered seperately

Type	a	b	c
HELM SA 100	500	202	277
HELM SA 150	600	222	327

Standard operating voltage 220V, 380V
Control through hanging panel or automatic process

Type	Profile	Max. Load	Running speed m/min	Power kW	3x400 V A	ED % S/h
HELM SA 100	600	500 kg	40/10; 20/5	0.25/0.6	0.9/0.6	60/240
HELM SA 100	600	500 kg	20;10	0.18	0.9	60/240
HELM SA 150	700	1000 kg	40/10; 20/5	0.25/0.6	0.9/0.6	60/240
HELM SA 150	700	1000 kg	20;10	0.18	0.9	60/240

Lowering Stations
Lift Station Profile 300 – 700

With safety control ‚B', scanning the centering plate - new

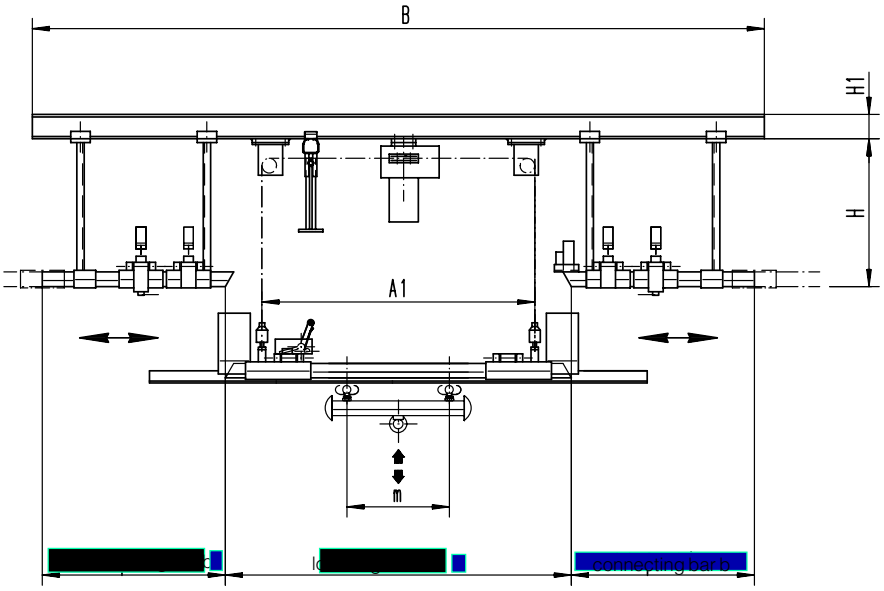

this design: driving direction both ways

Profile	max. load	max. lifting height	hoisting speed m/min.	A1 standard	a	b	H	H1	B	m
300	TD2 – 80 kg	3.5 m	8, 8/2, 16, 16/4	744	1000	500	377	100	2000	180
400	TD2 – 160 kg	3.5 m	8, 8/2, 16, 16/4	744	1000	750	385	100	2500	300
500	TD4 – 400 kg	4.5 m	10, 10/2.5, 16, 16/4	1120	1420	750	605	100	3000	420
600	TD5 – 800 kg	4.0 m	8, 8/2, 16, 16/3.5	1116	1440	750	655	120	3000	500
700	TD6 – 1600 kg	6.5 m	4, 4/1, 7, 7/1.75	1339	1900	1000	735	120	4000	700

All designs also available explosion proof.

Scope of delivery:

Complete with PLC safety control in switchboard, fully wired and feeder clamped.

Function: Up/Down with control rocker switch in dead man's control.

- entry or exit interlock device with attached bi-functional remote cylinder and magnetic valve
- Forward interlock device dto.
- positioning of carriage in lowering bar by centering plate
- entry and exit monitored by end switch

Driving direction examples

1) Passage

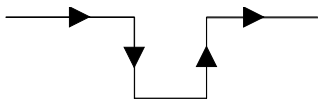

2) Entry = Exit

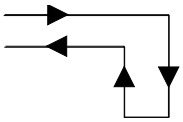

3) Driving direction selector switch

I

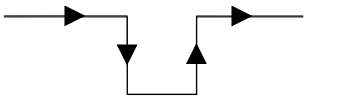

II

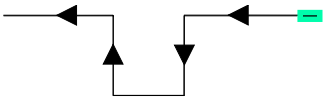

Lift Station

Lift station with Siemens S7 safety control
- standard design

Lift station, explosion protected design

Employment:
painting booth, pretreatment, etc.

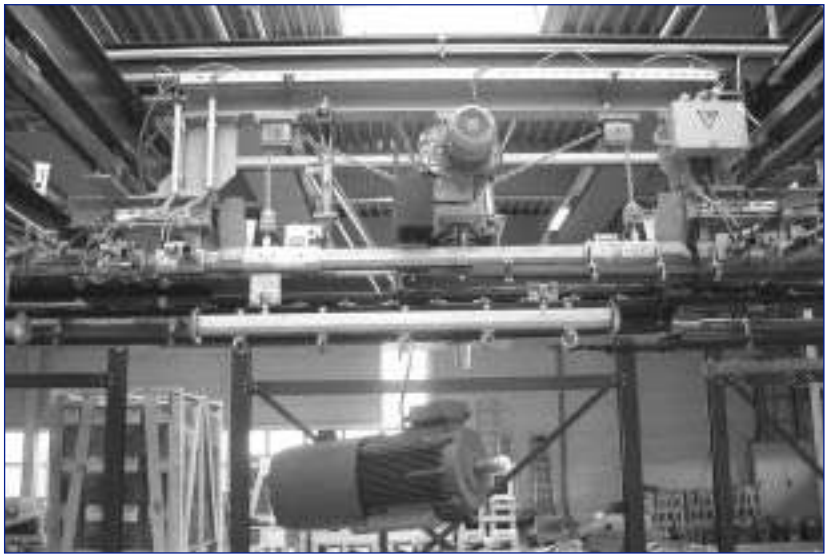

Lift station, relocatable sideways (manually or automatically) with light crane system

Employment:
Take up of heavy-weight loads which have to be picked up alongside the lift station.

HELM Combination
Automation of manual overhead conveyors

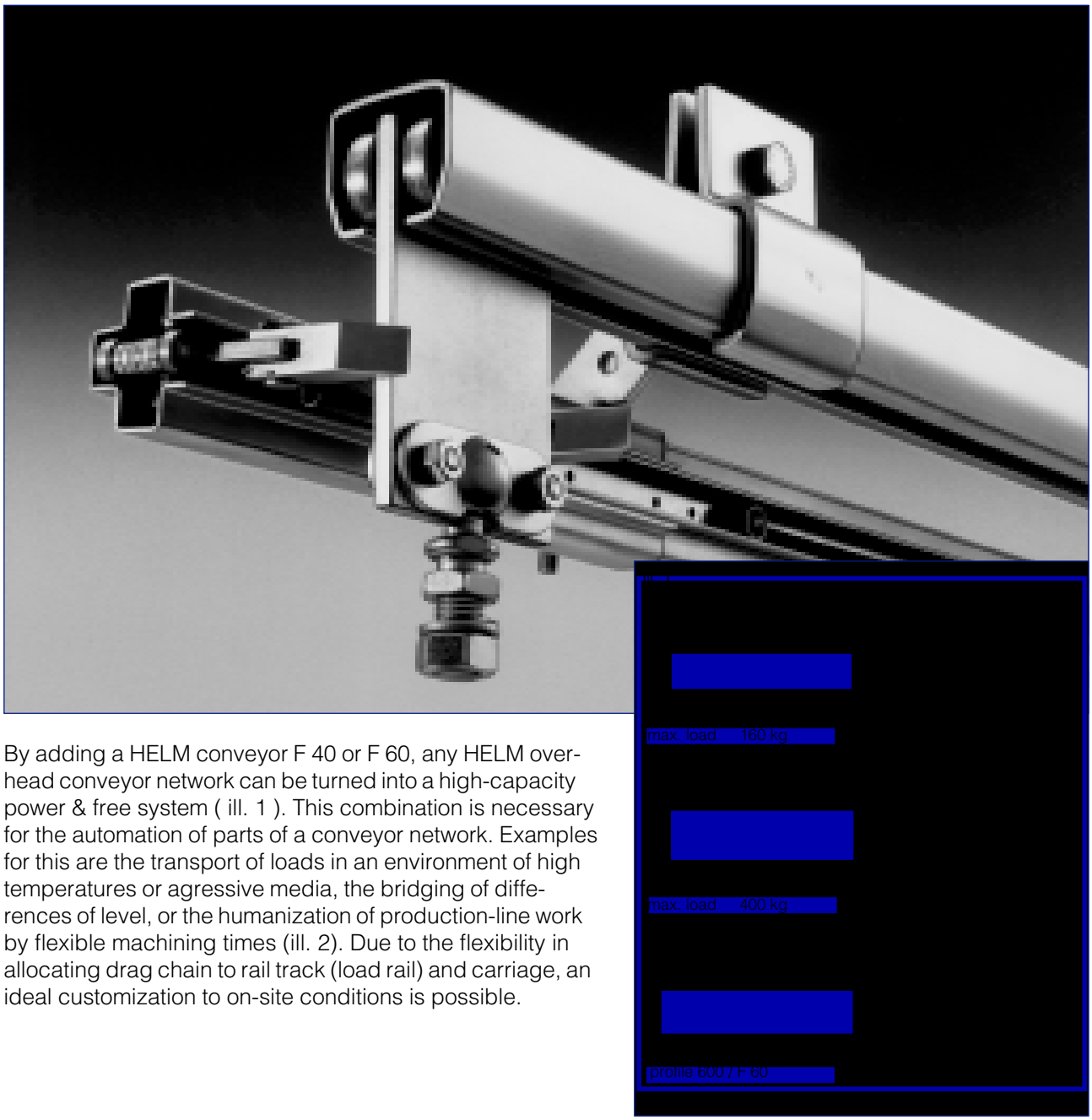

By adding a HELM conveyor F 40 or F 60, any HELM overhead conveyor network can be turned into a high-capacity power & free system (ill. 1). This combination is necessary for the automation of parts of a conveyor network. Examples for this are the transport of loads in an environment of high temperatures or agressive media, the bridging of differences of level, or the humanization of production-line work by flexible machining times (ill. 2). Due to the flexibility in allocating drag chain to rail track (load rail) and carriage, an ideal customization to on-site conditions is possible.

ill. 2

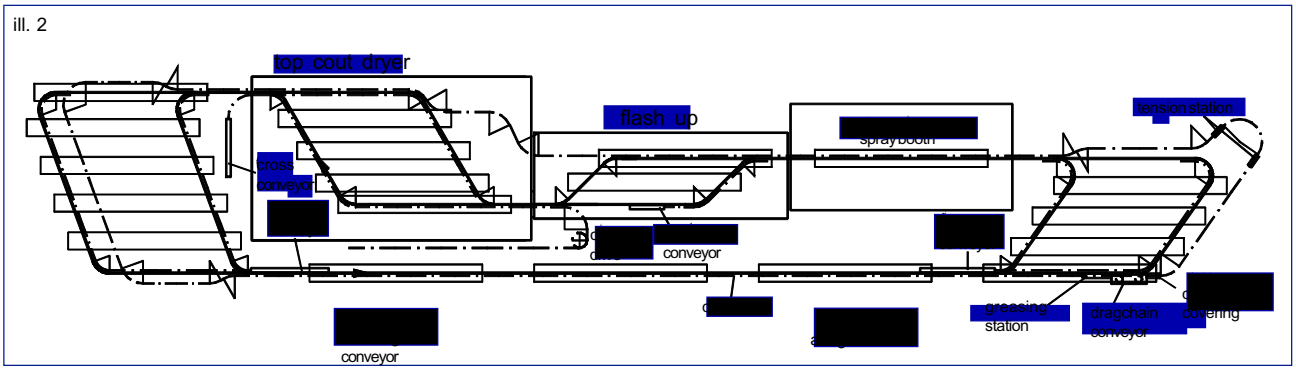

For further information regarding our ciruclar and power & free conveyors please see our catalogue group 50.

combination HELM profile 400 / F 40

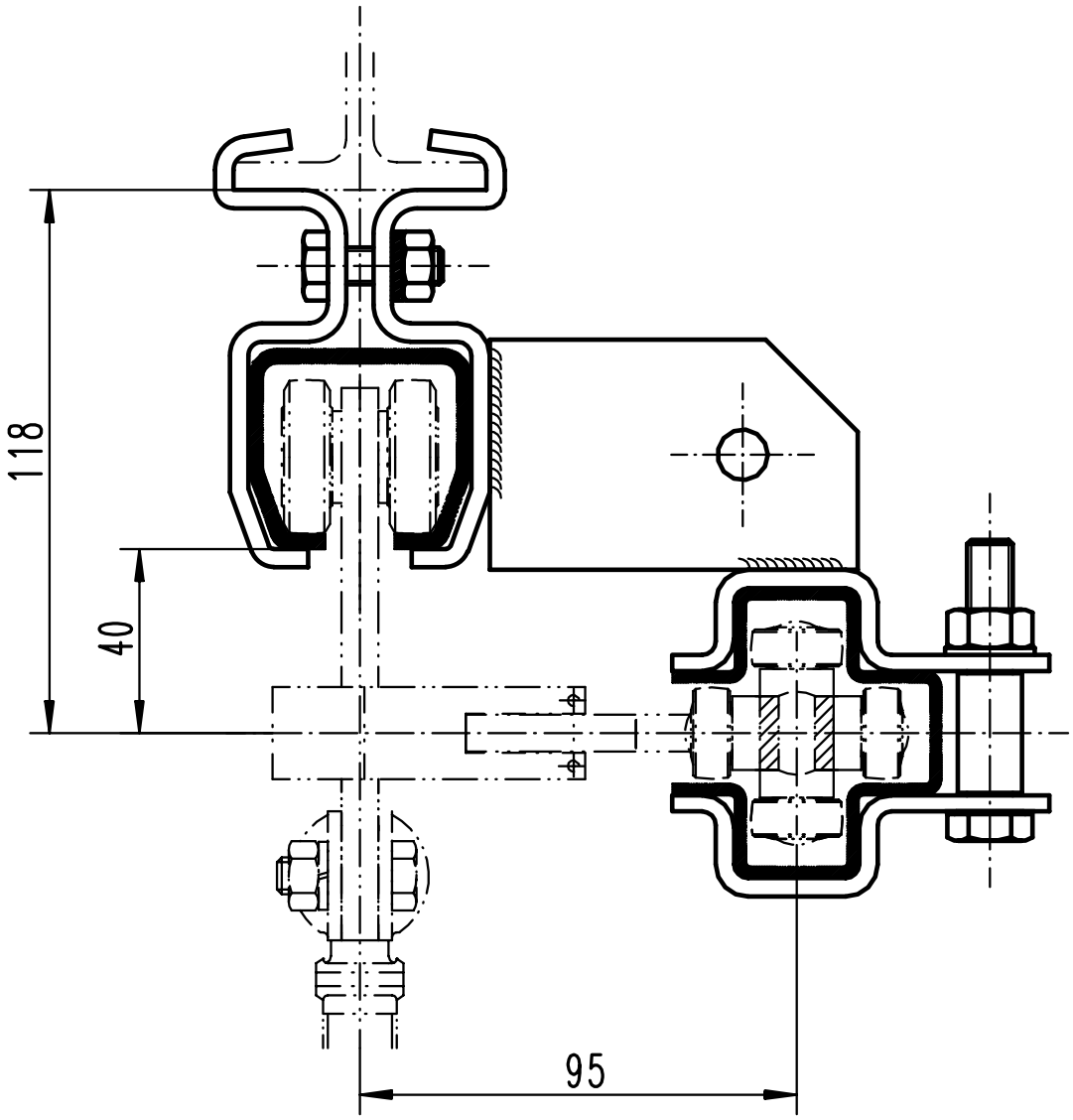

combination HELM profile 600 / F 60

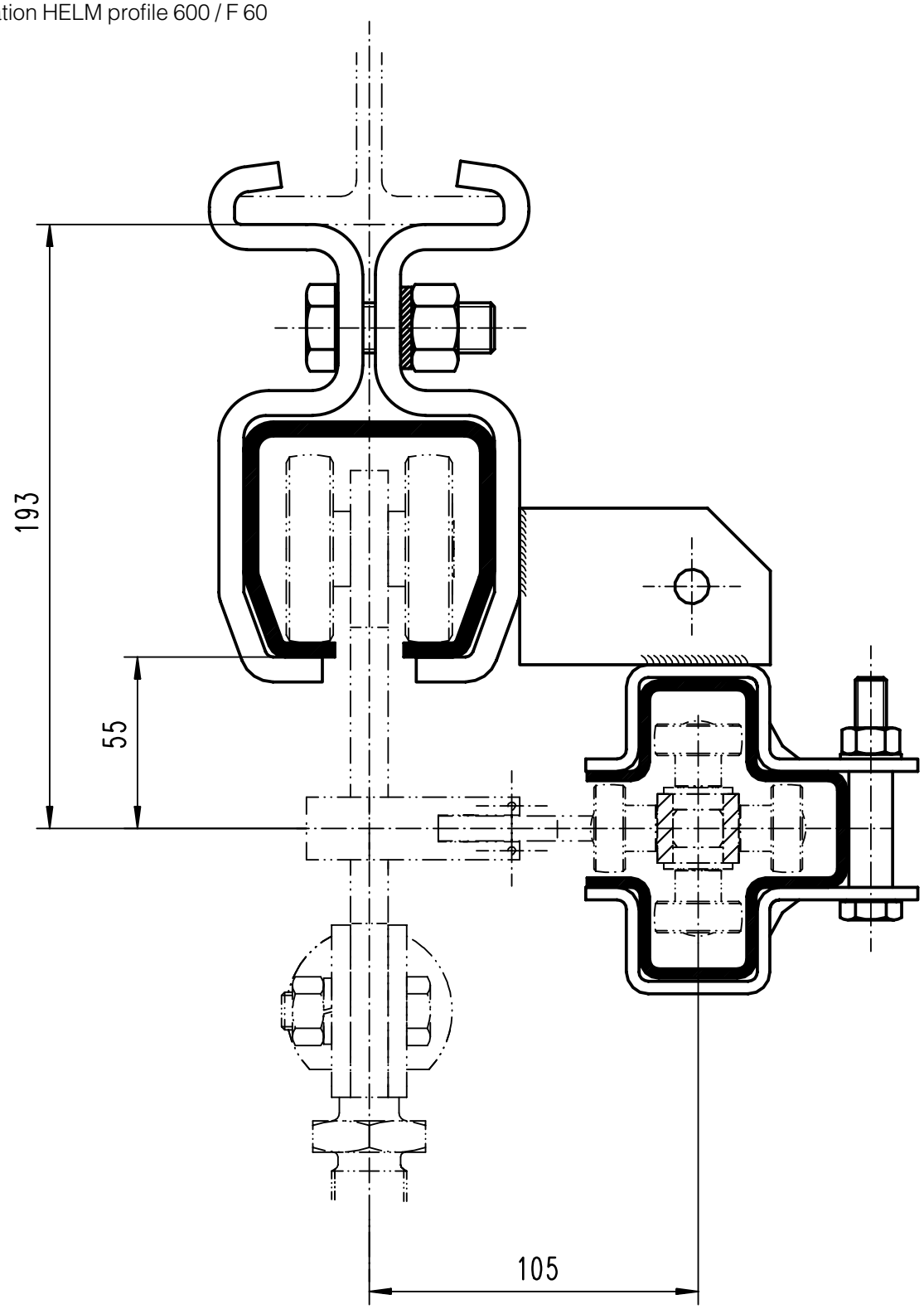

Delivery programme Group 14 a
HELM-Light Crane Systems

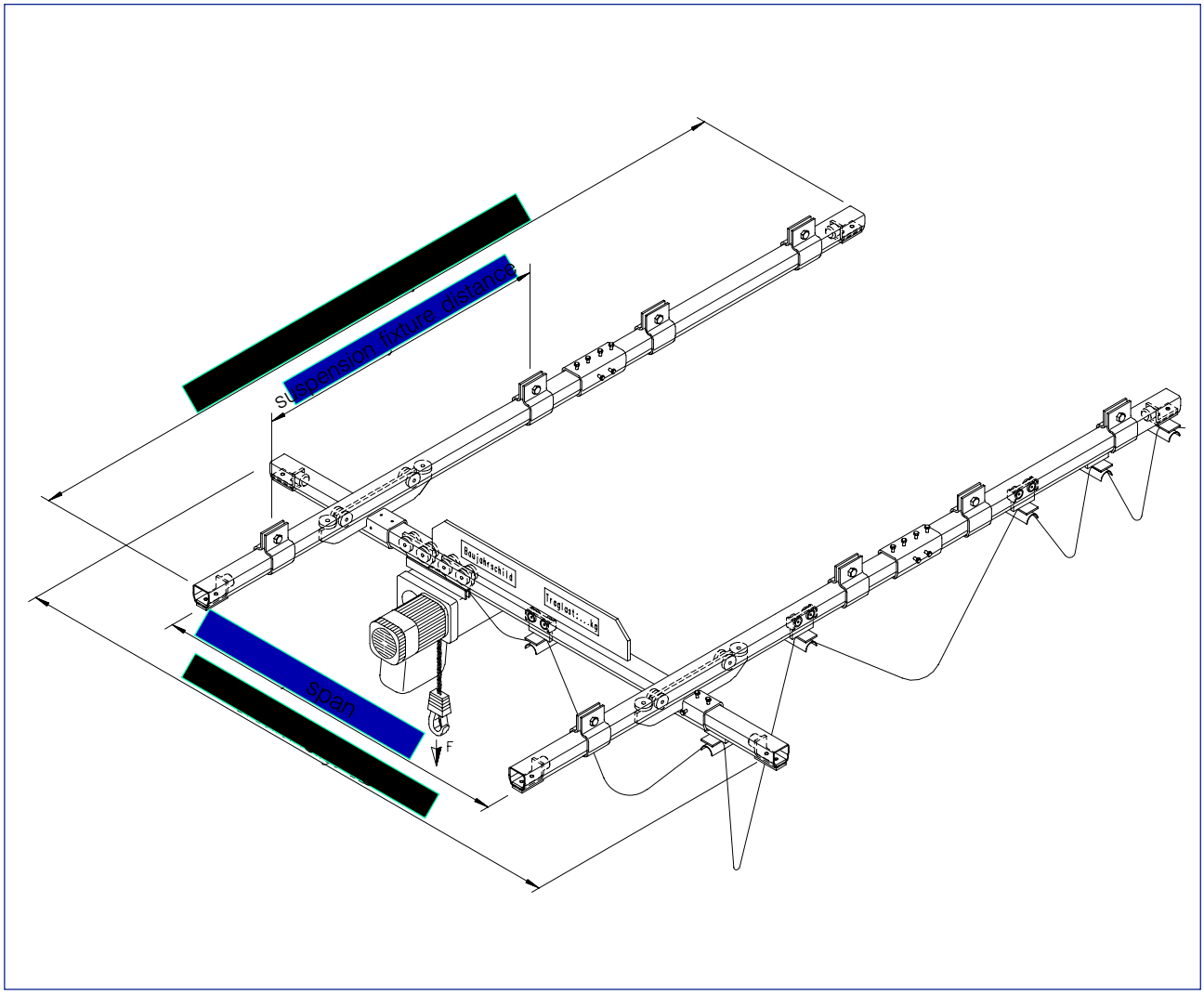

max. allowable load

load kg	80	150	250	500	1000
Laufschienenprofil	300	400	500	600	700

crane gantry length	L1	length of one's choice
cross bridge length	L2	standard length max. 6000 mm greater lengths available upon request
span	L3	width dependent on length of cross bridge
suspension fixture distance	x	1000 mm for max. load

Delivery programme Group 14 a
Light crane system in aluminium

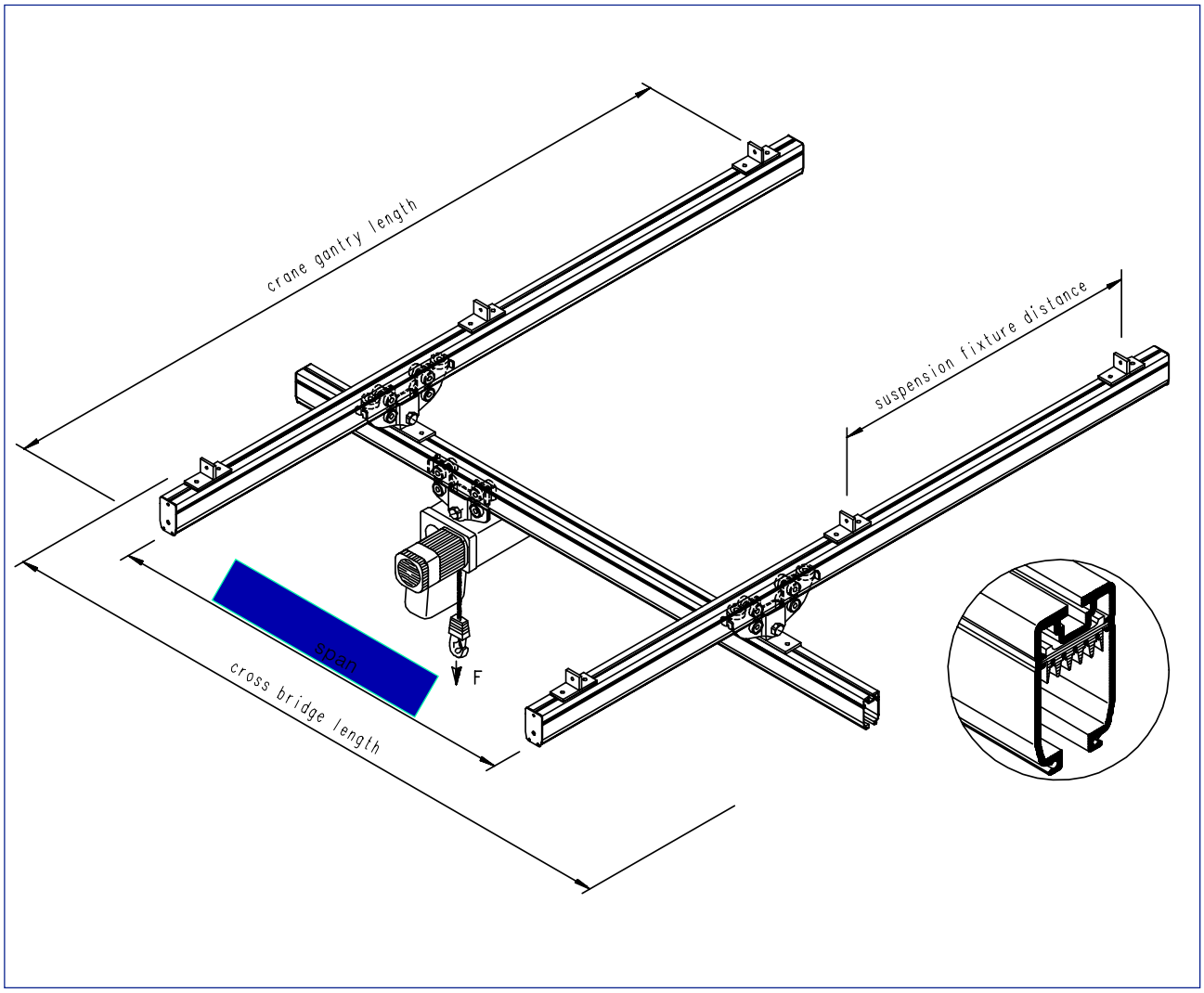

max. allowable load

HELM-ALU-Profile		123	160
load	max.	250 kg	500 kg
cross bridge length	max.	6000 mm*	6000 mm*
crane gantry length		as required	as required

* greater lengths available upon request

Available with or without integrated conductor line.

For further inforomation regarding aluminium light crane systems please see our separate list
Group 14 – ALU -

Delivery programme Group 18
HELM shelf servicing device

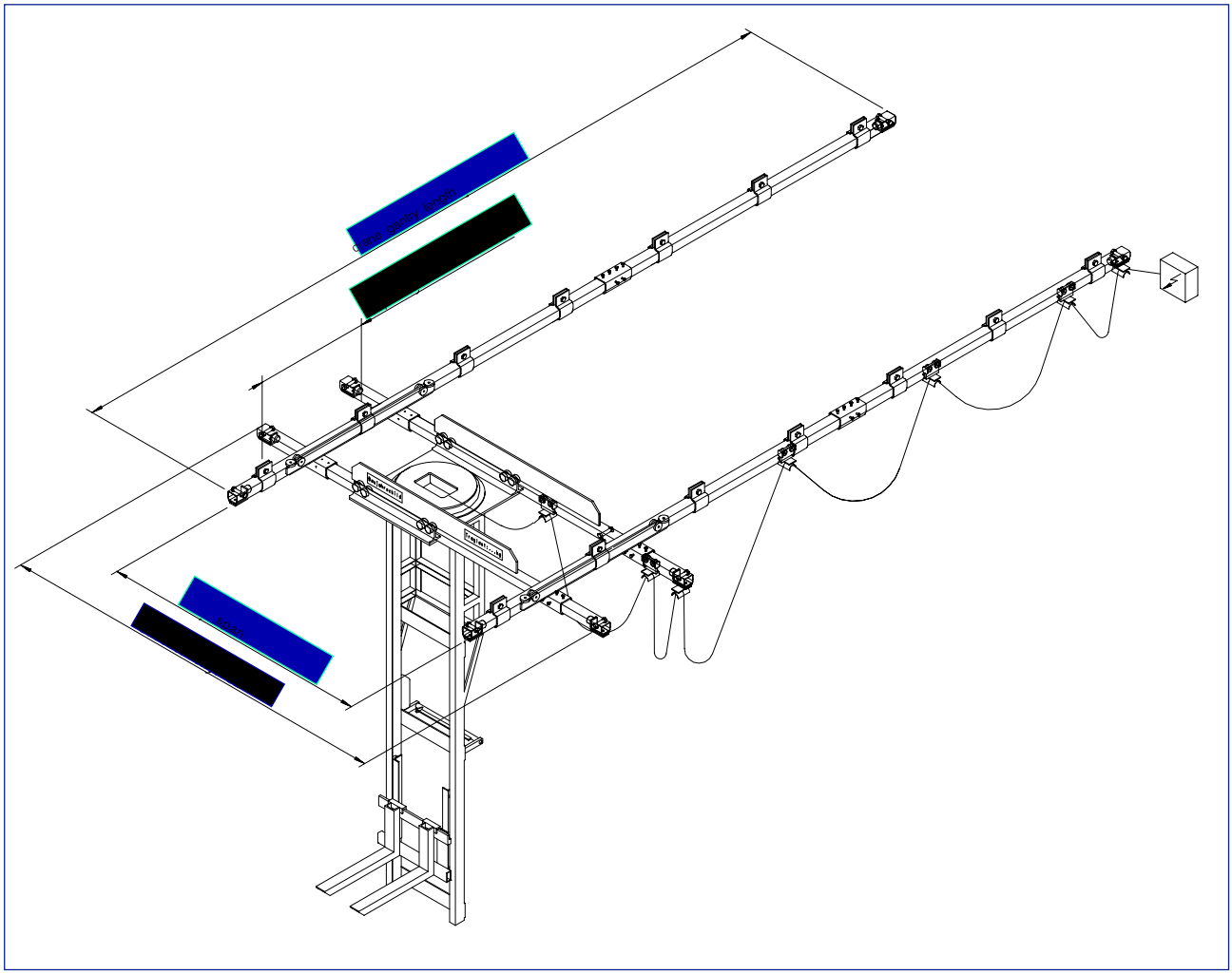

HELM	unit 100	unit 200		unit 300	unit 500
load	100 kg	150 kg	200 kg	300 kg	500 kg
profile	500	500/600		600	600/700

Delivery programme Group 50
HELM-suspension conveyors

HELM-circular conveyor F40

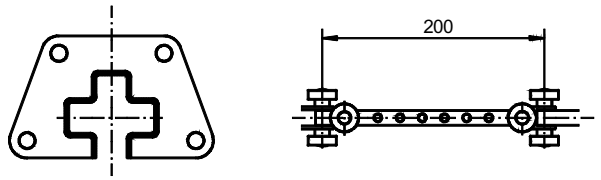

HELM-circular conveyor F60

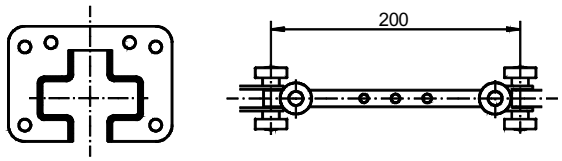

HELM-Power&Free conveyor F40-2

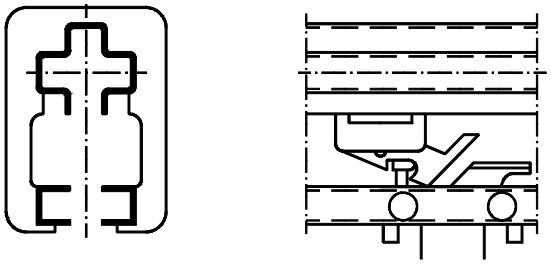

HELM-Combination F20

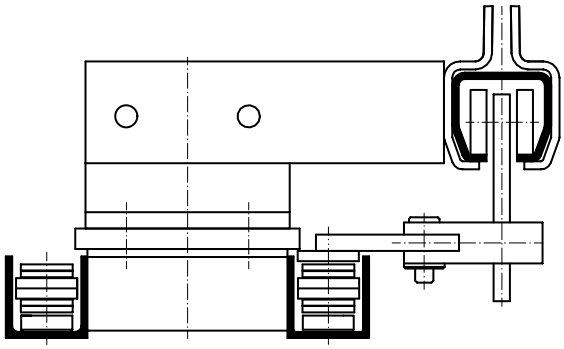

HELM-under floor conveyor F40
F60

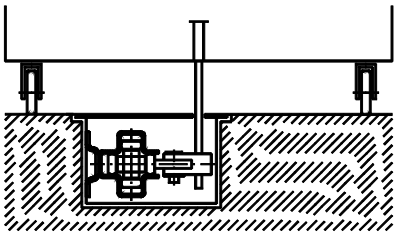

HELM-shingle-band-pallet conveyor F40-S
F60-S

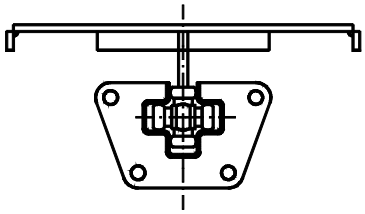

Information overview

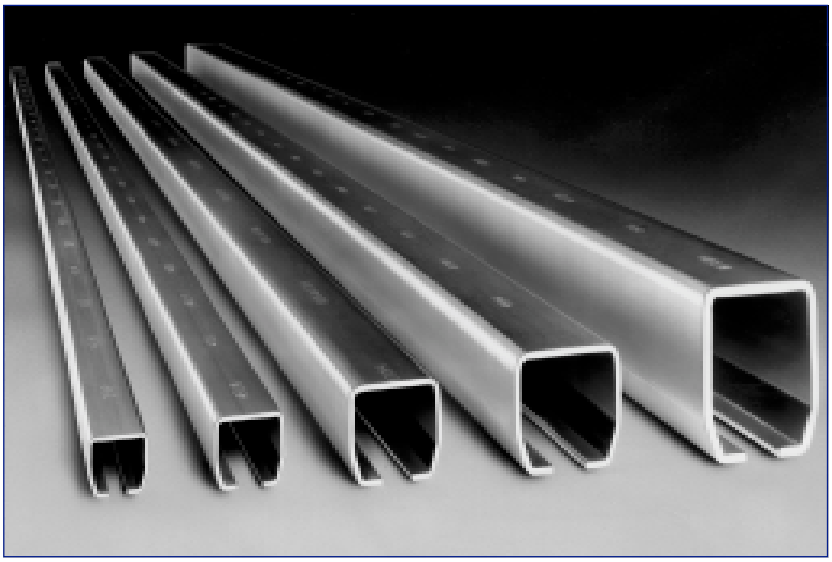

HELM-track profile - for different load requirements

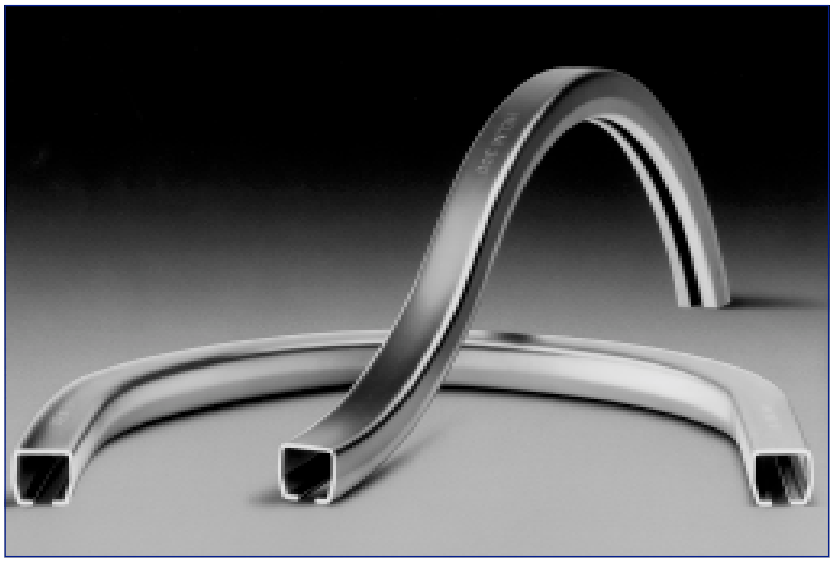

Track curves - horizontal and vertical with normal- and special radii

Splice Joint

Information overview

Clamp Support Bracket

Swivel - and Tongue switch

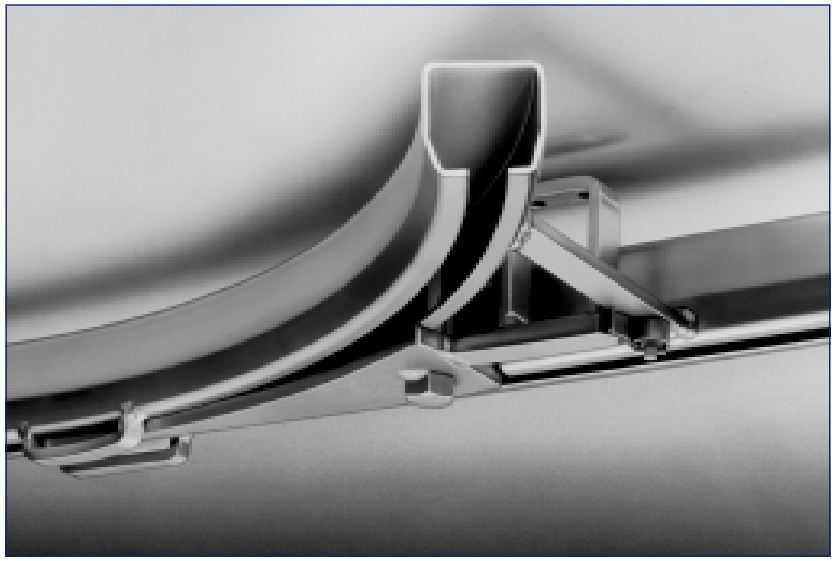

Turntable
- and Turntable switch

Slide-In Device

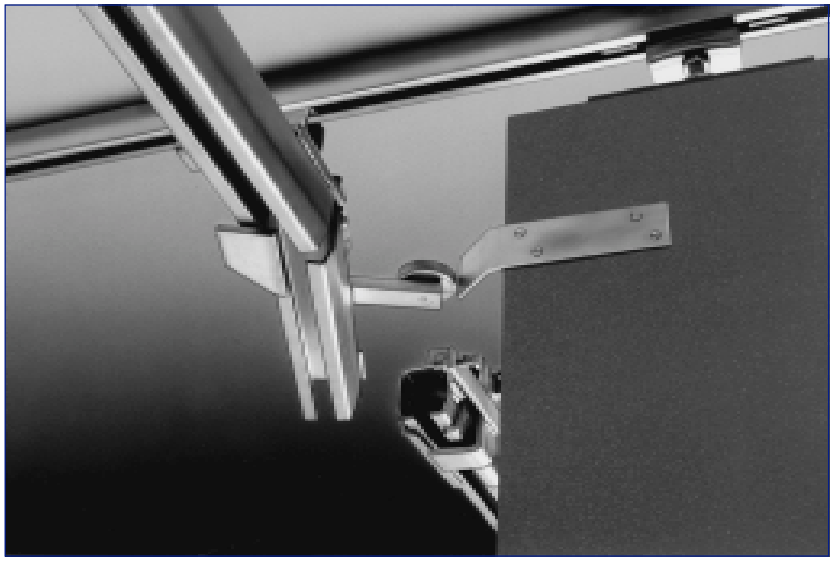

Autom. swivel device

Trolley

Information overview

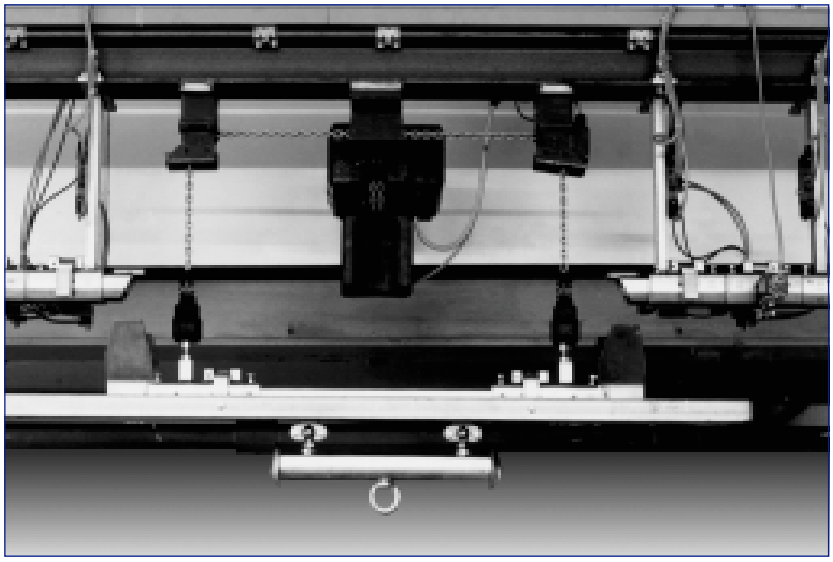

lift station

HELM-Combination
- also for the additional automati-
on of HELM Manual Overhead
Conveyor Systems -

Light Crane System
s. catalogue Group 14a

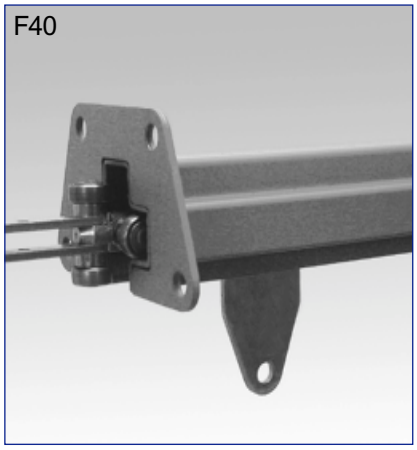

Circle- and Power & Free - conveyor
s. catalogue Group 50

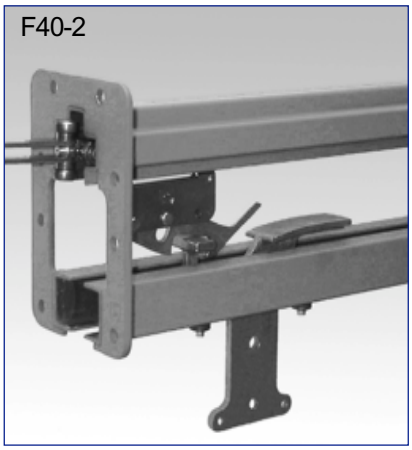

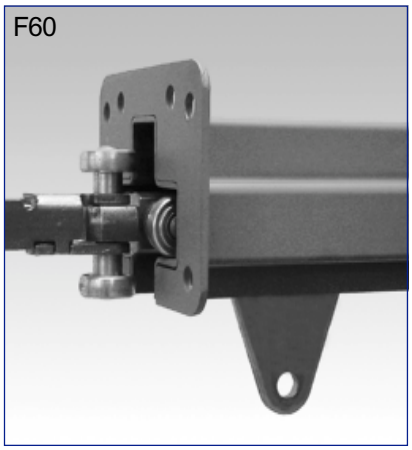

Information overview

Shelf servicing device
s. catalogue group 18

Energy supply systems
(cable- and hose carrier)
s. catalogue Group 17

Design examples

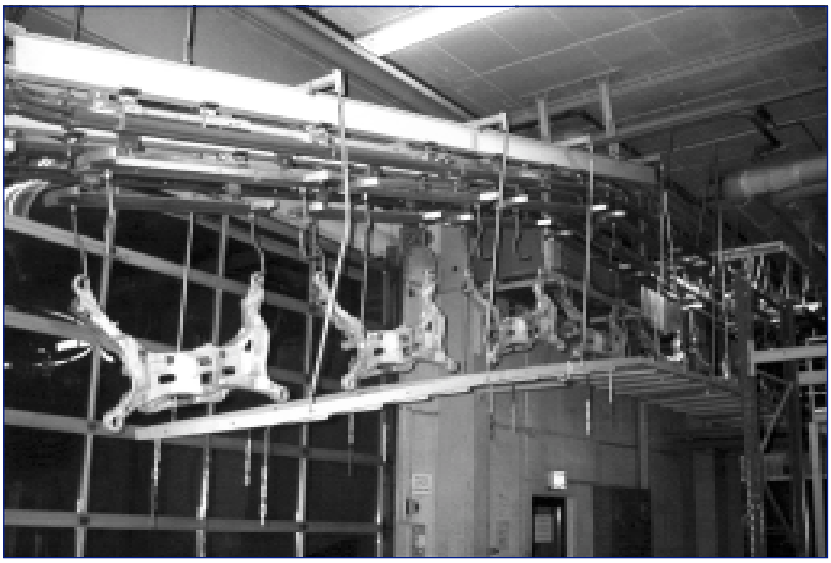

Design examples

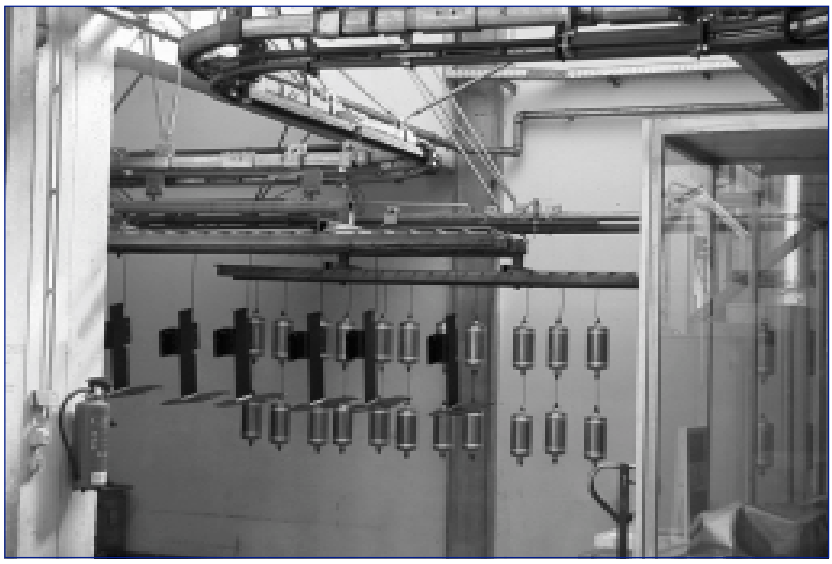

Design examples

Selection- and planning criteria
Telefax-Inquiry - (+49) 2056 / 18-136

HELM

Company: _____ Zip/City: _____

Name: _____ Phone/extension: _____

Address: _____ Fax: _____

HELM-Conveyor Technology -easy planning

We would like to receive:

- ☐ telephone advice
- ☐ the visit of a sales representative
- ☐ HELM-quotation
- ☐ HELM-prospectus with detailed technical data
  - Gruppe 14a — Light crane systems
  - Gruppe 14a ALU — Light crane system Alu
  - Gruppe 17 — Energy supply systems
  - Gruppe 18 — Shelf servicing device
  - Gruppe 50 — Circular and power & free conveyors

Installation:

- ☐ by HELM
- ☐ by customer

Realization:

- ☐ short-term
- ☐ medium-term
- ☐ investment planning

technical data of the planned installation

Load dimensions: _____

Load weight: _____

Planned hanger distance: _____

Conveying speed: _____

Extraordinary features: _____

Influences: high temperatures, humidity,
steams, etc., _____

Installation hight: _____

Fixing of installation:

- ☐ steel construction ☐ by HELM ☐ by customer
- ☐ to ceiling construction with assembly material

Ceiling construction details:

- ☐ steel construction
- ☐ reinforced concrete
- ☐ wooden beam construction

Please enclose drawings of the planned track as well as of the hall cross-section.

HELM-Range

TEH_14	Selection and Planning Criteria
TEH_14A	Light Crane Systems
TEH_17	Power Supply Systems
TEH_18	Shelf Servicing Device - RGB-
TEH_50	Circular and Power & Free Conveyors

HELM

Code with link to download the catalogue TEH_14

The technical specifications are up-to-date. We reserve the right to make modifications with regard to design and styling which serve the purpose of technical improvement. We appreciate your understanding that we assume no liability for any typing errors or any other errors. The reproduction of this document, in extracts or complete, is not permitted without our express written permission.

Part no.: TEH_14/12.2004
This catalogue supersedes all previous catalogues.g.

Woelm GmbH
Hasselbecker Str. 2-4
D-42579 Heiligenhaus
Tel.: +49 (0) 20 56 - 18 - 0
Fax: +49 (0) 20 56 - 18 - 21
www.woelm.de
contact@woelm.de

Woelm Austria GmbH
Seewalchen 5a
A-5201 Seekirchen
Tel.: +43 (0) 62 12 - 25 02
Fax: +43 (0) 62 12 - 69 95
www.woelm.at
contact@woelm.at