WHA

Ground source heat pumps

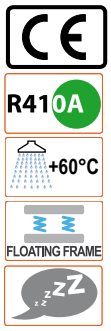

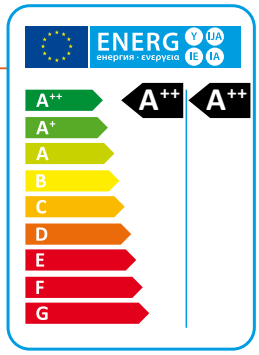

WHA heat pumps are particularly suitable for applications that utilise ground source probes.These units have been designed for use with radiant floor heating systems or those applications where it is necessary to have maximum efficiency when heating. They have been optimized on heating mode and are able to produce water up to 60°C.
WHA heat pumps are available in several versions. The most simple is a 2 pipe unit that can provide heating only. By fitting an external 3 port valve the unit can provide either heating or domestic hot water. There is also a 4 pipe unit that produces domestic hot water in a separate hydraulic circuit and can generate this irrespective of whether the unit is in heating or cooling mode. All the WHA units are also available in Free Cooling (FC) versions which provide low energy cooling by simply using the cool water that is available from either the ground source probes or the well water.
Differing versions and a wide range of accessories, enable the optimal solution to be selected.

VERSIONS

---	Standard, heating only.
RV	Reversible heating/cooling.
SW5	Heating only + domestic hot water circuit.
RV/SW6	Reversible version heating/cooling with independent DHW circuit.
FC	Free cooling version (available in all versions).

ACCESSORIES

A1NT	Hydraulic kit with one pump without tank.
A1ZZ	Hydraulic kit with tank and one pump.
A2NT	Hydraulic kit with two pump without tank.
A2ZZ	Hydraulic kit with tank and two pump.
DSSE	Electronic soft starter.
INSE	Serial interface card RS485.
KAVG	Rubber anti-vibration mountings.
KAVM	Spring anti-vibration mountings.
LS00	Low noise version.
MAML	Refrigerant circuit pressure gauges.
PCRL	Remote control panel.
S1NT	Source pump hydraulic kit (only water pump).
V2M0	2 way modulating valve to reduce source water consumption (4-20 mA; 0-10 V).
VSLI	Liquid line solenoid valve.
VTEE	Electronic thermostatic valve.

WHA - Only heating version		039	045	050	060	070	080	090	110	120
Energy Class in low temperature - EU reg. 811/2013		A++	A++	A++	A++	A++	A++	A++	A++	A++
Energy Class in high temperature - EU reg. 811/2013		A++	A++	A++	A++	A++	A++	A++	A++	A++
Heating capacity (EN14511) (1)	kW	51,7	59,0	71,2	80,0	92,5	105,9	120,8	136,1	152,0
Total input power (EN14511) (1)	kW	9,8	11,0	12,5	14,3	16,9	19,4	22,2	24,9	28,3
COP (EN14511) (1)	W/W	5,3	5,4	5,7	5,6	5,5	5,5	5,4	5,5	5,4
Heating capacity (EN14511) (2)	kW	38,9	44,2	53,9	60,3	69,5	79,5	89,9	100,7	112,5
Total input power (EN14511) (2)	kW	9,5	10,8	12,3	14,1	16,4	18,6	21,3	23,9	27,2
COP (EN14511) (2)	W/W	4,1	4,1	4,4	4,3	4,2	4,3	4,2	4,2	4,1
Power supply	V/Ph/Hz	400/3/50	400/3/50	400/3/50	400/3/50	400/3/50	400/3/50	400/3/50	400/3/50	400/3/50
Peak current	A	111,0	132,0	140,0	143,0	199,0	208,0	259,0	265,0	312,0
Maximum input current	A	32,0	42,0	44,0	50,0	59,0	68,0	74,0	80,0	88,5
Compressors / Circuits	n°/n°	2/1	2/1	2/1	2/1	2/1	2/1	2/1	2/1	2/1
Capacity steps	n°	2	2	2	2	2	2	2	2	2
Sound power (3)	dB(A)	74	74	75	76	76	77	77	78	78
Sound pressure (4)	dB(A)	46	46	47	48	48	49	49	50	50

WHA - Only heating version		130	152	162	190	210	240	260	300	320
Energy Class in low temperature - EU reg. 811/2013		A++	A++	A++	A++	A++	A++	A++	A++	A++
Energy Class in high temperature - EU reg. 811/2013		A++	A++	A++	A++	A++	A++	A++	A++	A++
Heating capacity (EN14511) (1)	kW	169,2	195,0	222,1	243,8	271,3	306,9	342,2	390,9	439,4
Total input power (EN14511) (1)	kW	31,6	36,8	41,0	45,1	51,0	57,3	63,6	72,5	81,4
COP (EN14511) (1)	W/W	5,4	5,3	5,4	5,4	5,3	5,3	5,4	5,4	5,4
Heating capacity (EN14511) (2)	kW	125,6	140,4	159,1	177,8	196,0	222,9	249,7	283,3	316,8
Total input power (EN14511) (2)	kW	30,5	35,1	39,2	43,1	48,7	54,9	61,0	69,4	77,9
COP (EN14511) (2)	W/W	4,1	4,0	4,0	4,1	4,0	4,1	4,1	4,1	4,1
Power supply	V/Ph/Hz	400/3/50	400/3/50	400/3/50	400/3/50	400/3/50	400/3/50	400/3/50	400/3/50	400/3/50
Peak current	A	320,5	358,5	375,4	333,0	345,0	400,5	417,5	472,4	506,2
Maximum input current	A	97,0	113,9	130,8	148,0	160,0	177,0	194,0	227,8	261,6
Compressors / Circuits	n°/n°	2/1	2/1	2/1	4/2	4/2	4/2	4/2	4/2	4/2
Capacity steps	n°	2	2	2	4	4	4	4	4	4
Sound power (3)	dB(A)	79	79	79	80	82	82	82	84	84
Sound pressure (4)	dB(A)	51	51	51	52	54	54	54	56	56

Performances refer to the following conditions:
(1)Heating: user water temperature 30/35°C, source water temperature 10/7°C.
(2)Heating: user water temperature 30/35°C, source water temperature 0/-3°C, 10% glycol.

(3)Sound power level in accordance with ISO 9614 (LS version). Operation mode 1, without water pumps.
(4)Sound pressure level at 10 mt from the unit in free field conditions direction factor Q=2, calculated in accordance with ISO 9614 (LS version). Operation mode 1, without water pumps.

WHA/RV - Reversible version		039	045	050	060	070	080	090	110	120
Energy Class in low temperature - EU reg. 811/2013		A++	A++	A++	A++	A++	A++	A++	A++	A++
Energy Class in high temperature - EU reg. 811/2013		A++	A++	A++	A++	A++	A++	A++	A++	A++
Heating capacity (EN14511) (1)	kW	51,7	59,0	71,2	80,0	92,5	105,9	120,8	136,1	152,0
Total input power (EN14511) (1)	kW	9,8	11,0	12,5	14,3	16,9	19,4	22,2	24,9	28,3
COP (EN14511) (1)	W/W	5,3	5,4	5,7	5,6	5,5	5,5	5,4	5,5	5,4
Heating capacity (EN14511) (2)	kW	38,9	44,2	53,9	60,3	69,5	79,5	89,9	100,7	112,5
Total input power (EN14511) (2)	kW	9,5	10,8	12,3	14,1	16,4	18,6	21,3	23,9	27,2
COP (EN14511) (2)	W/W	4,1	4,1	4,4	4,3	4,2	4,3	4,2	4,2	4,1
Cooling capacity (EN14511) (3)	kW	59,8	68,1	83,9	94,0	107,8	124,1	142,5	161,8	178,7
Total input power (EN14511) (3)	kW	10,3	11,3	13,1	14,9	17,4	19,6	23,0	26,4	29,8
EER (EN14511) (3)	W/W	5,8	6,0	6,4	6,3	6,2	6,3	6,2	6,1	6,0
Cooling capacity (EN14511) (4)	kW	42,9	49,0	60,3	67,4	77,5	88,9	101,3	114,3	126,9
Total input power (EN14511) (4)	kW	10,0	11,3	12,9	14,7	17,4	19,9	22,7	25,5	29,0
EER (EN14511) (4)	W/W	4,3	4,3	4,7	4,6	4,4	4,5	4,5	4,5	4,4
Free Cooling capacity (5)	kW	22,8	22,9	36,0	36,3	36,6	49,3	71,0	72,4	73,5
Power supply	V/Ph/Hz	400/3/50	400/3/50	400/3/50	400/3/50	400/3/50	400/3/50	400/3/50	400/3/50	400/3/50
Peak current	A	111,0	132,0	140,0	143,0	199,0	208,0	259,0	265,0	312,0
Maximum input current	A	32,0	42,0	44,0	50,0	59,0	68,0	74,0	80,0	88,5
Compressors / Circuits	n°/n°	2/1	2/1	2/1	2/1	2/1	2/1	2/1	2/1	2/1
Capacity steps	n°	2	2	2	2	2	2	2	2	2
Sound power (6)	dB(A)	74	74	75	76	76	77	77	78	78
Sound pressure (7)	dB(A)	46	46	47	48	48	49	49	50	50

WHA/RV - Reversible version		130	152	162	190	210	240	260	300	320
Energy Class in low temperature - EU reg. 811/2013		A++	A++	A++	A++	A++	A++	A++	A++	A++
Energy Class in high temperature - EU reg. 811/2013		A++	A++	A++	A++	A++	A++	A++	A++	A++
Heating capacity (EN14511) (1)	kW	169,2	195,0	222,1	243,8	271,3	306,9	342,2	390,9	439,4
Total input power (EN14511) (1)	kW	31,6	36,8	41,0	45,1	51,0	57,3	63,6	72,5	81,4
COP (EN14511) (1)	W/W	5,4	5,3	5,4	5,4	5,3	5,3	5,4	5,4	5,4
Heating capacity (EN14511) (2)	kW	125,6	140,4	159,1	177,8	196,0	222,9	249,7	283,3	316,8
Total input power (EN14511) (2)	kW	30,5	35,1	39,2	43,1	48,7	54,9	61,0	69,4	77,9
COP (EN14511) (2)	W/W	4,1	4,0	4,0	4,1	4,0	4,1	4,1	4,1	4,1
Cooling capacity (EN14511) (3)	kW	198,5	231,4	265,2	289,5	321,7	363,7	405,3	462,9	520,1
Total input power (EN14511) (3)	kW	33,1	38,9	43,7	47,0	54,2	60,5	66,8	76,5	86,2
EER (EN14511) (3)	W/W	6,0	5,9	6,1	6,1	5,9	6,0	6,1	6,1	6,0
Cooling capacity (EN14511) (4)	kW	141,2	163,6	187,4	205,1	226,9	257,3	287,4	328,1	368,5
Total input power (EN14511) (4)	kW	32,3	37,8	42,2	46,3	52,4	58,8	65,2	74,3	83,4
EER (EN14511) (4)	W/W	4,4	4,3	4,4	4,4	4,3	4,4	4,4	4,4	4,4
Free Cooling capacity (5)	kW	74,1	93,1	94,0	128,2	129,6	130,9	163,0	164,4	203,0
Power supply	V/Ph/Hz	400/3/50	400/3/50	400/3/50	400/3/50	400/3/50	400/3/50	400/3/50	400/3/50	400/3/50
Peak current	A	320,5	358,5	375,4	333,0	345,0	400,5	417,5	472,4	506,2
Maximum input current	A	97,0	113,9	130,8	148,0	160,0	177,0	194,0	227,8	261,6
Compressors / Circuits	n°/n°	2/1	2/1	2/1	4/2	4/2	4/2	4/2	4/2	4/2
Capacity steps	n°	2	2	2	4	4	4	4	4	4
Sound power (6)	dB(A)	79	79	79	80	82	82	82	84	84
Sound pressure (7)	dB(A)	51	51	51	52	54	54	54	56	56

Performances refer to the following conditions:

(1)Heating: user water temperature 30/35°C, source water temperature 10/7°C.

(2)Heating: user water temperature 30/35°C, source water temperature 0/-3°C con 10% glycol.

(3)Cooling: user water temperature 23/18°C, source water temperature 30/35°C.

(4)Cooling: user water temperature 12/7°C, source water temperature 30/35°C.

(5)Cooling: user water temperature 10°C, source water temperature 20°C, compressors OFF.

(6)Sound power level in accordance with ISO 9614 (LS version). Operation mode 1, without water pumps.

(7)Sound pressure level at 10 mt from the unit in free field conditions direction factor Q=2, calculated in accordance with ISO 9614 (LS version). Operation mode 1, without water pumps.

FRAME
All WHA units are made from hot-galvanised sheet steel, painted with polyurethane powder enamel and stoved at 180°C to provide maximum protection against corrosion. The frame is self-supporting with removable panels. All screws and rivets used are made from stainless steel. The standard colour of the units is RAL 7035.

REFRIGERANT CIRCUIT
The refrigerant utilised is R410A. The refrigerant circuit is assembled using internationally recognised brand name components with all brazing and welding being performed in accordance with ISO 97/23. Each refrigerant circuit is totally independent from the other with the result that any fault or alarm condition on one circuit does not influence the other.
The refrigerant circuit includes: sight glass, filter drier, thermal expansion valve with external equalizer, Schrader valves for maintenance and control and pressure safety device (for compliance with PED regulations).

COMPRESSORS
The compressors used are a high performance scroll type that incorporates a special scroll design which enhances the efficiency of the refrigerant cycle when the source temperature is low. The compressors are all supplied with a crankcase heater and thermal overload protection by a klixon embedded in the motor winding. They are mounted in a separate enclosure thus enabling them to be maintained even if the unit is operating. Access to this enclosure is via the front panel of the unit. The crankcase heater is always powered when the compressor is in stand-by.

SOURCE HEAT EXCHANGER
Source heat exchanger are braze-welded plates and are made of stainless steel AISI 316. From size 039 to size 162 are single-circuit, from size 190 are all double circuit cross-flow. The use of this type of exchangers greatly reduces the refrigerant charge of the unit compared to the conventional shell and tube evaporators, and increases the efficiency of the refrigerant loads. The heat exchangers are factory insulated with flexible close cell material and are protected by a temperature sensor used as antifreeze protection kit.

USER EXCHANGER
The user side heat exchanger is a braze welded, plate type heat exchanger, manufactured from AISI 316 stainless steel. From size 039 to size 162 they have a single water side circuit, from the size 190 they are double circuit, “cross flow” type. All units are supplied with a sub-cooler to enhance the performance of the refrigerant cycle. The user heat exchangers are factory insulated with flexible close cell material.

MICROPROCESSORS
All WHA units are supplied as standard with microprocessor controls. The microprocessor controls the following functions:
control of the water temperature, antifreeze protection, compressor timing, compressor automatic starting sequence, alarm reset, volt free contact for remote general alarm, alarms and operation LED’s. If required (available as an option), the microprocessor can be configured in order for it to connect to a site BMS system thus enabling remote control and management. The Hidros technical department can discuss and evaluate, in conjunction with the customer, solutions using MODBUS protocols.

ELECTRIC ENCLOSURE
The enclosure is manufactured in order to comply with the requirements of the electromagnetic compatibility standards CEE 73/23 and 89/336. Access to the enclosure is achieved by removing the front panel of the unit. The following components are supplied as standard on all units: main switch, thermal overloads (protection of pumps and fans), compressor fuses, control circuit automatic breakers, compressor contactors, fan contactors and pump contactors. The terminal board has volt free contacts for remote ON-OFF, Summer/Winter change over (reversible type only) and general alarm. For all three phase units, a sequence relay that disables the power supply in the event that the phase sequence is incorrect (scroll compressors can be damaged if they rotate in the wrong direction), is fitted as standard.

CONTROL AND PROTECTION DEVICES
All units are supplied with the following control and protection devices: Return and supply user heat exchanger sensors, return and supply source heat exchanger sensors, high pressure switch with manual reset, low pressure switch with automatic reset, high pressure safety valve, compressor thermal overload protection, pump thermal overload protection (when present), source heat exchanger flow switch.

HYDRAULIC KIT
All WHA units can be supplied with water pump circulation kit installed on Surce, User or Recovery circuit.

VERSIONS

WHA/RV 2 PIPES VERSION.
This version is capable of cooling during summer operation by using a 4 way re-versing valve in the refrigerant circuit.

WHA/RV/SW6 4 PIPES VERSION.
This version has 4 pipes on the user side and is able to produce simultaneously, hot and cold water on 2 independent hy-draulic circuits. The domestic hot water production is independent of the opera-tion mode of the unit.

VERSIONE FREE COOLING
These versions, in addition to the characteristics described above, can produce cold water during summer operation using the cold water available from the source ground probes. All free cooling versions are supplied with an intermediate heat exchanger and a 3 way valve which modulates the water flowto the user circuit depending on the required user cold water temperature. During free cooling mode the compressors may be off or will operate partially to augment the free cooling available.

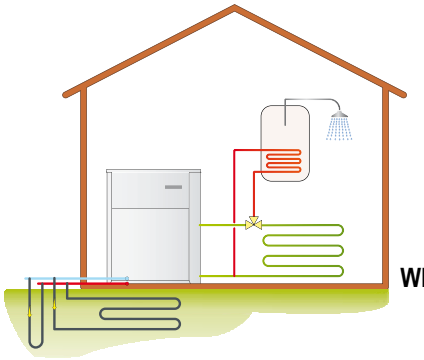

WHA/RV

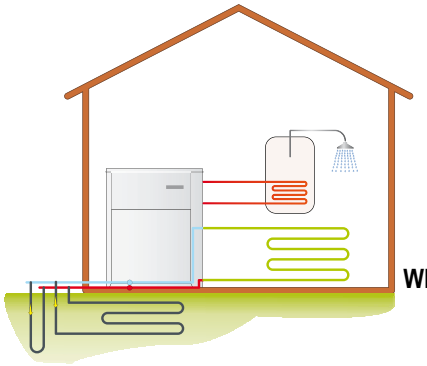

WHA/RV/SW6

CONFIGURATIONS

MOD.	P2	P4	P2+FC	P4+FC	P2+A	P4+A	P2+FC+A	P4+FC+A
39	F1	F1	F1	F1	F3	F4	F4	F4
45	F1	F1	F1	F1	F3	F4	F4	F4
50	F1	F1	F1	F1	F3	F4	F4	F4
60	F1	F1	F1	F1	F3	F4	F4	F4
70	F1	F1	F1	F1	F3	F4	F4	F4
80	F1	F1	F1	F1	F3	F4	F4	F4
90	F2	F2	F2	F2	F3	F4	F4	F4
110	F2	F2	F2	F2	F3	F4	F4	F4
120	F2	F2	F2	F2	F3	F4	F4	F4
130	F2	F2	F2	F2	F3	F4	F4	F4
152	F2	F2	F2	F2	F3	F4	F4	F4
162	F2	F2	F2	F2	F3	F4	F4	F4
190	F3	F4	F4	F4	F4	F5	F5	F5
210	F3	F4	F4	F4	F4	F5	F5	F5
240	F3	F4	F4	F4	F4	F5	F5	F5
260	F3	F4	F4	F4	F4	F5	F5	F5
300	F3	F4	F4	F4	F4	F5	F5	F5
320	F3	F4	F4	F4	F4	F5	F5	F5

Legend

P2	2 pipe system	**P2+A**	2 pipe system with hydraulic kit
P4	4 pipe system	**P4+A**	4 pipe system with hydraulic kit
P2+FC	2 pipe system with Free Cooling	**P2+FC+A**	2 pipe system with Free Cooling and hydrauklic kit
P4+FC	4 pipe system with Free Cooling	**P4+FC+A**	4 pipe system with Free Cooling and hydrauklic kit

WHA Options	Code	039÷080	090÷110	120÷162	190÷260	300÷320
Main switch		●	●	●	●	●
Microprocessor control		●	●	●	●	●
Remote ON/OFF digital input		●	●	●	●	●
Summer/Winter digital input		●	●	●	●	●
LS low noise version	LS00	○	○	○	○	○
Electronic Soft starter	DSSE	○	○	○	○	○
Rubber anti-vibration mountings	KAVG	○	○	○	○	○
Spring anti-vibration mountings	KAVM	○	○	○	○	○
Refrigerant circuit pressure gauges	MAML	○	○	○	○	○
Liquid line solenoid valve	VSLI	○	○	○	○	○
Remote control panel	PCRL	○	○	○	○	○
Serial interface card RS485 with MODBUS protocol	INSE	○	○	○	○	○
2 way modulating to control source water consumption	V2M0	○	○	○	○	○
Electronic thermostatic valve	VTEE	○	○	○	○	○
Hydraulic kit with one pump without tank - user circuit	A1NTU	○	○	○	○	○
Hydraulic kit with one pump without tank - source circuit	A1NTS	○	○	○	○	○
Hydraulic kit with one pump without tank - recovery circuit	A1NTR	○	○	○	○	○
Hydraulic kit with two pumps without tank - user circuit	A2NTU	○	○	○	○	○
Hydraulic kit with two pumps without tank - source circuit	A2NTS	○	○	○	○	○
Hydraulic kit with two pumps without tank - recovery circuit	A2NTR	○	○	○	○	○

● Standard, ○ Optional, – Not available.

OPERATION LIMITS

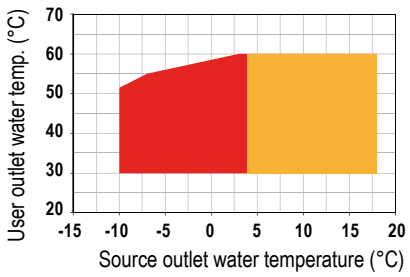

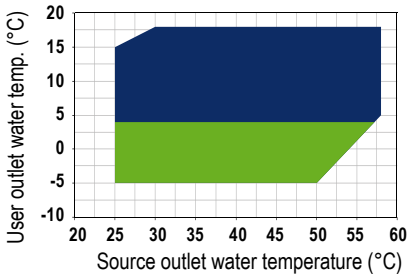

Heating

Heating with glycol source circuit

Cooling

Cooling with glycol user circuit

Operating limits with 5°C Δt

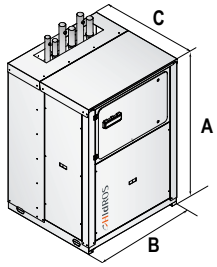

Frame 1

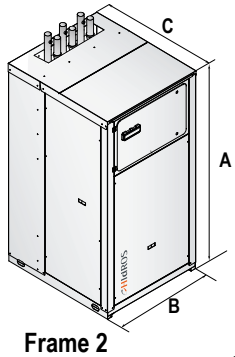

Frame 2

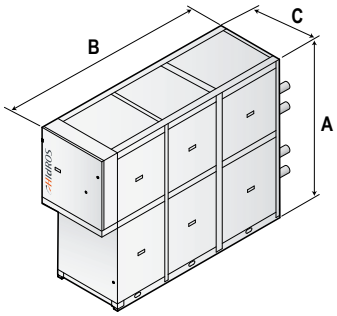

Frame 3

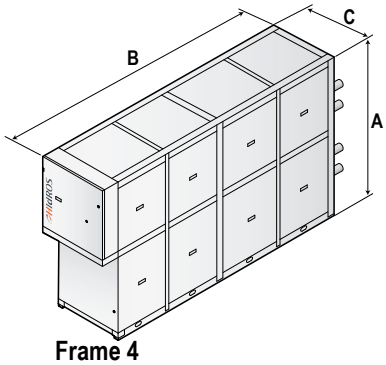

Frame 4

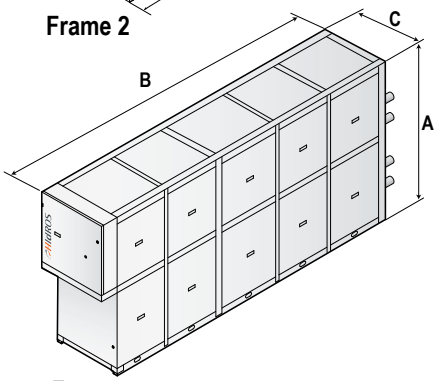

Frame 5

Mod.	A (mm)	B (mm)	C (mm)
F1	1566	1101	1005
F2	1986	1101	1255
F3	1900	2170	800
F4	1900	3120	800
F5	1900	4200	800