3.6 Universal joints Fork joints Angled ball joints

3.6 Universal joints, Angled ball joints, Fork joints, Ball joints

DIN 808
Universal joints with friction bearing

→ *Page 938*

GN 648.1
Ball joint heads with female thread

→ *Page 948*

GN 752
Joint pieces
Steel,
Stainless Steel

→ *Page 956*

GN 808.2
Universal joint shafts with friction bearing

→ *Page 939*

GN 648.2
Ball joint heads with threaded bolt

→ *Page 949*

GN 782
Ball joints

→ *Page 957*

DIN 808
Universal joints with friction bearing
Stainless Steel

→ *Page 940*

GN 648.5
Ball joint heads with female thread
Stainless Steel

→ *Page 950*

DIN 71802
Angled ball joints
Steel,
Stainless Steel

→ *Page 958*

DIN 808
Universal joints with needle bearing

→ *Page 942*

GN 648.6
Ball joint heads with threaded bolt
Stainless Steel

→ *Page 951*

GN 710
Dust caps
for angled ball joints
DIN 71802

→ *Page 960*

GN 808.3
Universal joint shafts with needle bearing

→ *Page 943*

GN 751
Fork joints
Fork heads
DIN 71752

→ *Page 952*

GN 240
Quick-fit couplings

→ *Page 961*

GN 9080
Universal joints
for ordinary applications

→ *Page 944*

GN 751
Fork joints
Fork heads
DIN 71752
Aluminium

→ *Page 954*

GN 240.1
Quick-fit couplings

→ *Page 962*

GN 808.1
Gaiters
for universal joints

→ *Page 945*

GN 751
Fork joints
Fork heads
DIN 71752
Stainless Steel

→ *Page 955*

GN 240.2
Quick-fit couplings

→ *Page 963*

Stainless Steel | Ergostyle | Softline | Cleanline | Sanline | ATEX | ESD | Inch

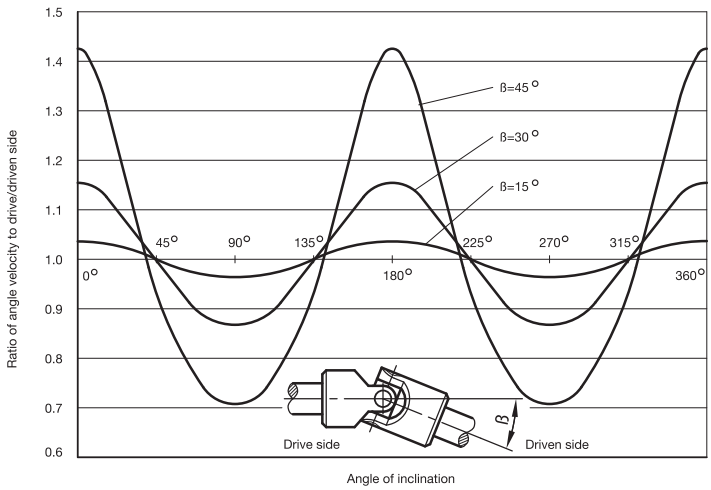

The single universal joints transfer the initial smooth rotation as an irregular rotation. One revolution of the drive shaft via single universal joint will cause the driven shaft to accelerate and decelerate twice. The extent of the irregularity depends on the operating angle ß.

In order to obtain a smooth rotation of the driven shaft two single or one double universal joint is required. In such cases where minor irregularities in the movement are acceptable or where minor operating angles are the norm a single universal joint will do.

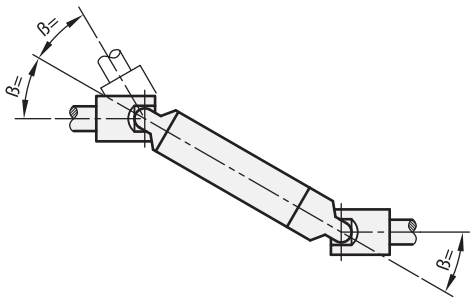

For a smooth transfer of a rotating speed, the angle of inclination ß must be equal at both ends of the connecting shaft.

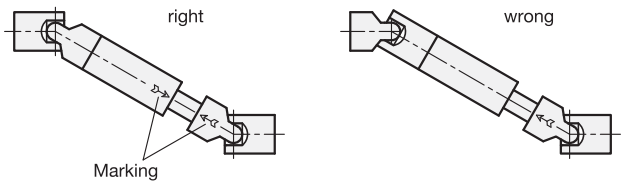

Due to a misconnection of the universal joint shafts, the irregular rotation of each joint is not compensated, but strengthened. This allows joint bearings and wedge profiles to be destroyed. For this reason, the markings of the universal joint shaft halves have to be opposite to each other.

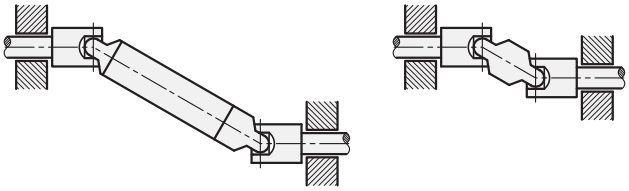

Furthermore the bearings must be as close as possible to the universal joints.

For continuous operation of universal joints with friction bearings adequate lubrication is essential. If drip lubrication is not possible they should be lubricated at least once a day. It is also possible to fit the universal joint with a gaiter GN 808.1 which can be filled with oil or grease.

Universal joints with friction bearing, Type EG

Selection of the size

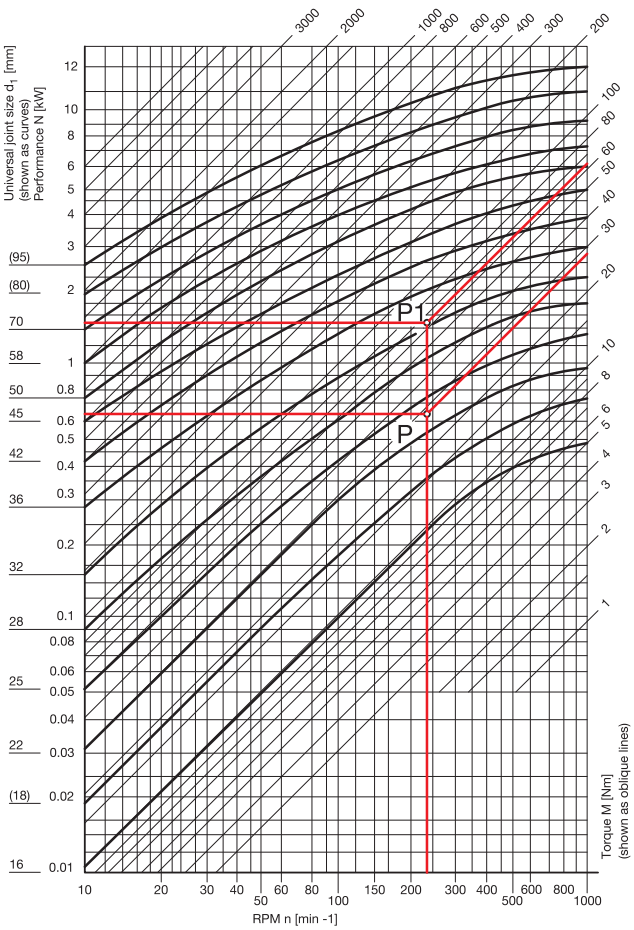

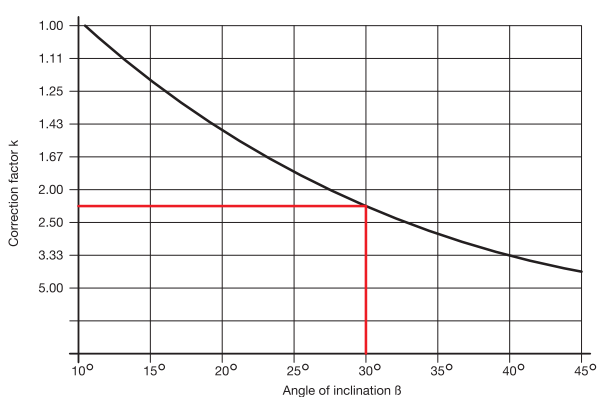

The table shows the transferable output N and/or torques M of universal joints DIN 808, type EG (single friction bearing) in relation to the r.p.m. n.

The values are only applicable to a constant speed of rotation, constant load and an operating inclination angle of max. 10°. They are not applicable to universal joints in Stainless Steel.

For larger inclination angles ß a nominal output N increased by the correction coefficient k and/or a nominal torque M has to be selected (see example below).

Conversion formulae:

$$\text{Torque M [Nm]} = 9550 \frac{\text{N [kW]}}{\text{n [min}^{-1}\text{]}}$$

$$\text{Output N [kW]} = \frac{\text{M [Nm] x n [min}^{-1}\text{]}}{9550}$$

1 kW = 1,36 PS 1 PS = 0,736 kW

Example 1

Output to be transferred N = 0,65 kW
R.p.m. n = 230 min^{-1}
Angle of inclination ß = 10°

Correction coefficient k = 1
Indicative output N‘ = Nominal output N

Intersection point P is arrived at from 0,65 kW and 230 min^{-1} (which corresponds to a torque of 27 Nm).

The next size up universal joint corresponding to point P is the model with a diameter d_1 = 25.

Example 2

Torque to be transferred M = 27 Nm
R.p.m. n = 230 min^{-1}
Angle of inclination ß = 30°

Correction coefficient k = 2,25
Indicative torque = 2,25 x 27 Nm = 60 Nm

Intersection point P_1 is arrived at from 61 Nm and 230 min^{-1} (which is equivalent to an indicative output N = 1,47 kW).

The next size up universal joint corresponding to P_1 is the model with a diameter d_1 = 32.

Universal joints with needle bearing, Type EW

Selection of the size

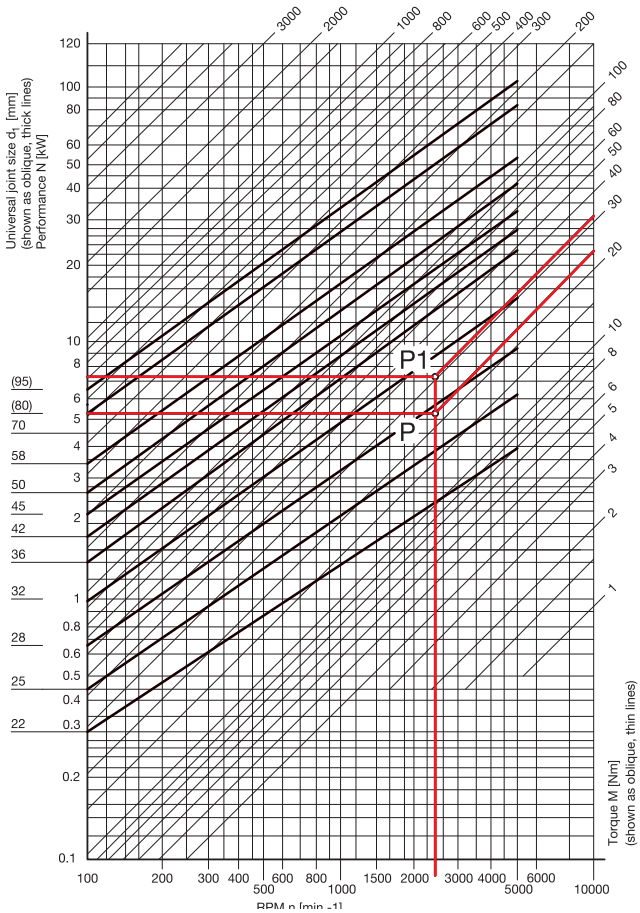

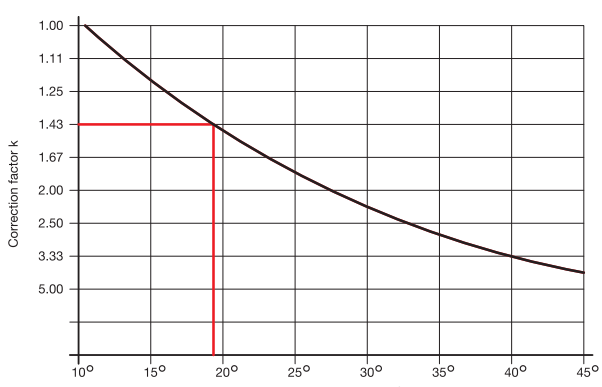

The table shows the transferable output N and/or torques M of universal joints Kreuzgelenken DIN 808, type EW (single needle bearing) in relation to the r.p.m. n.

The values are only applicable to a constant speed of rotation, constant load and an operating inclination angle of max. 10°.

For larger inclination angles ß a nominal output N increased by the correction coefficient k and/or a nominal torque M has to be selected (see example below).

Conversion formulae:

$$\text{Torque M [Nm]} = 9550 \frac{N\,[kW]}{n\,[min^{-1}]}$$

$$\text{Output N [kW]} = \frac{M\,[Nm] \times n\,[min^{-1}]}{9550}$$

1 kW = 1,36 PS 1 PS = 0,736 kW

Example 1

Torque to be transferred N = 5,5 kW
R.p.m. n = 2300 min^{-1}
Angle of inclination ß = 10°

Correction coefficient k = 1
Indicative output N = Nominal output N

Intersection point P is arrived at from 5,5 kW and 2300 min^{-1} (which corresponds to a torque of 23 Nm).

The next size up universal joint corresponding to point P is the model with a diameter d_1 = 28.

Example 2

Torque to be transferred M = 23 Nm
R.p.m. n = 2300 min^{-1}
Angle of inclination ß = 18°

Correction coefficient k = 1,43
Indicative torque = 1,43 x 23 Nm = 33 Nm

Intersection point P_1 is arrived at from 33 Nm and 2300 min^{-1} (which is equivalent to an indicative output N = 7,9 kW).

The next size up universal joint corresponding to P1 is the model with a diameter d_1 = 32.

Universal joints with friction bearing

single or double

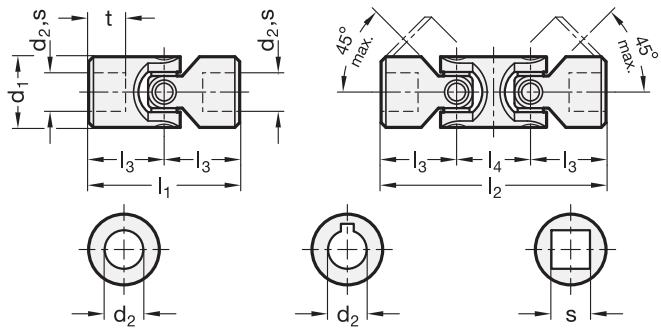

2 Bore code

B without keyway
K with keyway (from d_2=10)
V with square

5 Type

EG single, friction bearing
DG double, friction bearing

1 d_1	3 d_2 H7 Bore	3 s H10 Square	4 l_1 Type EG	4 l_2 Type DG	l_3	l_4	t min.	
16	6	V 6*	34	56	17	22	8	Permissible r.p.m. and torque → *Page 936*
16	8	V 8*	40	62	20	22	11	
16	10	V 8*	52	74	26	22	14	
22	10	V 10*	48	74	24	26	12	
22	12	V 10*	62	88	31	26	18	
25	12	V 12*	56	86	28	30	13	
25	16	V 12*	74	104	37	30	21	
28	14	V 14*	60	96	30	36	13	
32	16	V 16*	68	104	34	36	16	
32	20	V 16*	86	124	43	38	24	
36	18	V 18*	74	114	37	40	17	
42	20	V 20*	82	128	41	46	18	
42	25	V 20*	108	156	54	48	31	
45	22	V 22*	95	145	47,5	50	22	
50	25	V 25*	108	163	54	55	26	
50	30	V 25*	132	188	66	56	38	
58	30	V 30*	122	190	61	68	29	
58	32	V 30*	130	198	65	68	33	
70*	35	V 35	140	212	70	72	35	

* not availble from stock, requires a minimum order quantity

Specification

- Steel
  blank
- Joint bearing areas / pins / bearing sleeves
  case hardened
- *Keyway JS9 DIN 6885 → Page 1124*
- *Cross holes GN 110 → Page 1127*
- *ISO-Fundamental Tolerances → Page 1132*
- RoHS compliant

On request

- with other or unequal bores

Information

The permissible r.p.m. of universal joints with friction bearing DIN 808 is to a large extent dependent on the type of application such as load, duration, angular disposition as well as lubrication → *Page 936*. For over 1000 r.p.m. universal joints with needle bearing should be used → *Page 942*.

For continuous use ample lubrication is essential. This achieved by fitting the joint with a grease filled gaiter GN 808.1 → *Page 945*.

How to order

1 2 3 4 5
DIN 808-25-B16-74-EG

1	d_1
2	Bore code
3	d_2 (s)
4	l_1 (l_2)
5	Type

Universal joint shafts with friction bearing

with longitudinal compensation

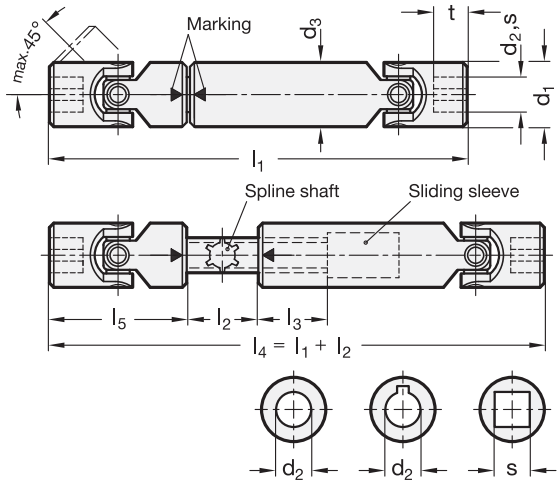

2 Bore code

- **B** without keyway
- **K** with keyway
- **V** with square

1 d_1	3 d_2 H7 Bore		3 s H11 Square	4 l_1 - l_2				d_3	l_3 Guide length	l_5	t min.	
22	K 10	B 10*	V 10*	140-30	160- 40	180- 60	-	22	30	48	12	Permissible r.p.m. and torque → Page 936
22*	K 12	B 12	-	140-30	160- 40	180- 60	-	22	30	62	18	
25	K 12	B 12*	V 12*	160-30	180- 45	200- 70	250-105	26	40	56	13	
25*	K 16	B 16	-	160-30	180- 45	200- 70	250-105	26	40	74	21	
28	K 14	B 14*	V 14*	170-30	200- 60	220- 80	280-140	29	40	60	13	
32	K 16	B 16*	V 16*	190-30	240- 80	275-115	380-210	32	40	68	16	
32*	K 20	B 20	-	190-30	240- 80	275-115	380-210	32	40	86	24	
36	K 18	B 18*	V 18*	230-50	270-100	290-110	400-220	37	40	74	17	
42	K 20	B 20*	V 20*	250-50	320-120	420-220	-	42	45	82	18	
42*	K 25	B 25	-	250-50	320-120	420-220	-	42	45	108	31	
45	K 22	B 22*	V 22*	270-50	330-100	470-240	-	47	50	95	22	
50	K 25	B 25*	V 25*	295-50	350-100	420-170	-	52	50	108	26	
50*	K 30	B 30	-	295-50	350-100	420-170	-	52	50	132	38	
58	K 30	B 30*	V 30*	330-50	400-110	-	-	58	60	122	29	

* not availble from stock, requires a minimum order quantity

Specification

- Steel blank
- Joint bearing areas / pins / bearing sleeves case hardened
- *Keyway JS9 DIN 6885 → Page 1124*
- *Cross holes GN 110 → Page 1127*
- *ISO-Fundamental Tolerances → Page 1132*
- RoHS compliant

On request

- different lengths l_1 - l_2
- with other or unequal bores

Information

Universal joint shafts with friction bearing GN 808.2 do not only bridge the misaligenment of two shafts, but at the same time they offer a length compensation. The power transmission is achiev-bed by two universal joints DIN 808 (type EG) a splined shaft and a sliding sleeve.

It is important to check the accuracy when connec-ting the splined shaft to the sliding sleeve.
The markings → ← have to be opposite to each other. Any kind of misconnection leads to an inhomogeneous output and to a quick abrasion.

How to order

1 2 3 4
GN 808.2-50-K 25-350-100

1	d_1
2	Bore code
3	d_2 (s)
4	l_1 - l_2

Stainless Steel-Universal joints with friction bearing

single or double

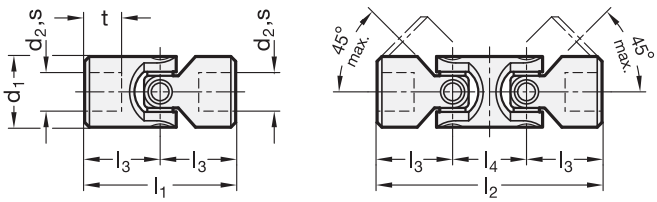

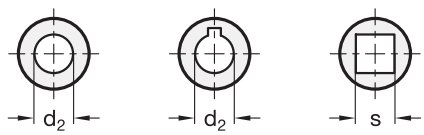

Inox Stainless Steel

2 Bore code

B without keyway
K with keyway (from d_2=10)
V with square

5 Type

EG single, friction bearing
DG double, friction bearing

1 d_1	3 d_2 H7 Bore	3 s H10 Square	4 l_1 Type EG	4 l_2 Type DG	l_3	l_4	t min.
16	6	V 6*	34	56	17	22	8
16	8	V 8*	40	62	20	22	11
22	10	V 10*	48	74	24	26	12
25	12	V 12*	56	86	28	30	13
32	16	V 16*	68	104	34	36	16
42	20	V 20*	82	128	41	46	18
50	25	V 25*	108	163	54	55	26

* not availble from stock, requires a minimum order quantity

Specification

6

- Stainless Steel AISI 304 **NI**
- *Keyway JS9 DIN 6885 → Page 1124*
- *Cross holes GN 110 → Page 1127*
- *ISO-Fundamental Tolerances → Page 1132*
- *Stainless Steel characteristics → Page 1144*
- RoHS compliant

On request

- with other or unequal bores

Information

Since the moveable parts are not surface treated, i.e. not case hardened, the possibilities of application of these universal joints are much more limited compared to the ones made of standard steel. Therefore, the guide lines for the selection of universal joints with friction bearing → *Page 938* according to the diagram may be applied at **a limited extent only**. Rotational speeds over 200 min may become critical.

For continuous use of the Stainless Steel-Universal joints, ample lubrication is very important. This achieved by fitting the joint with a grease filled gaiter GN 808.1 → *Page 945*.

The order example refers to universal joints with equal bores both ends d_2 and s.

How to order

1 2 3 4 5 6
DIN 808-32-B 16-104-DG-NI

1	d_1
2	Bore code
3	d_2 (s)
4	l_2 (l_1)
5	Type
6	Material

Universal joint shafts with longitudinal compensation
with friction bearing GN 808.2 → *Page 939*
with needle bearing GN 808.3 → *Page 943*

Universal joints with needle bearing

single or double

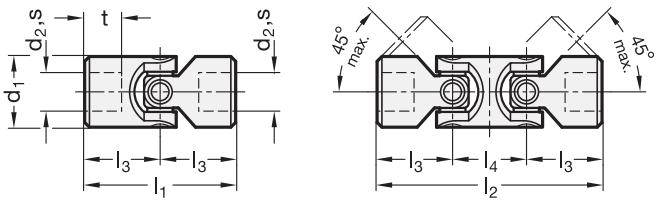

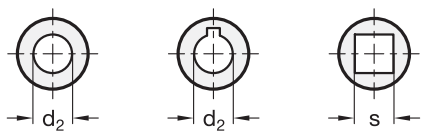

2 Bore code

B without keyway
K with keyway
V with square

5 Type

EW single, needle bearing
DW double, needle bearing

1 d_1	3 d_2 H7 Bore	3 s H10 Square	4 l_1 Type EW	4 l_2 Type DW	l_3	l_4	t min.	
22	10	V 10*	48	74	24	26	12	Permissible r.p.m. and torque → *Page 937*
22	12	V 10*	62	88	31	26	18	
25	12	V 12*	56	86	28	30	13	
25	16	V 12*	74	104	37	30	21	
28	14	V 14*	60	96	30	36	13	
32	16	V 16*	68	104	34	36	16	
32	20	V 16*	86	124	43	38	24	
36	18	V 18*	74	114	37	40	17	
42	20	V 20*	82	128	41	46	18	
42	25	V 20*	108	156	54	48	31	
45	22	V 22*	95	145	47,5	50	22	
50	25	V 25*	108	163	54	55	26	
50	30	V 25*	132	188	66	56	38	
58	30	V 30*	122	190	61	68	29	
58	32	V 30*	130	198	65	68	33	
70*	35	V 35	140	212	70	72	35	

* not availble from stock, requires a minimum order quantity

Specification

- Steel
  blank
- Joint bearing areas, pins
  case hardened
- *Keyway JS9 DIN 6885 → Page 1124*
- *Cross holes GN 110 → Page 1127*
- *ISO-Fundamental Tolerances → Page 1132*
- RoHS compliant

On request

- with other or unequal bores

Information

The permissible r.p.m. of universal joints with needle bearings DIN 808 is higher than for those with friction bearings, but is still dependent on the load, duration of use as well as angular disposition. Ideal applications allow speeds of up to 4000 r.p.m → *Page 937.*

Needle bearings give the universal joints at 3° to 5° angular disposition a considerably higher degree of efficiency than those fitted with friction bearings. The needle bearings have a permanent lubrication and thus do not require servicing. Infomation regarding the selection of universal joints with needle bearing.

How to order

1 2 3 4 5
DIN 808-50-B 25-163-DW

1	d_1
2	Bore code
3	d_2 (s)
4	l_2 (l_1)
5	Type

Universal joint shafts with needle bearing

with longitudinal compensation

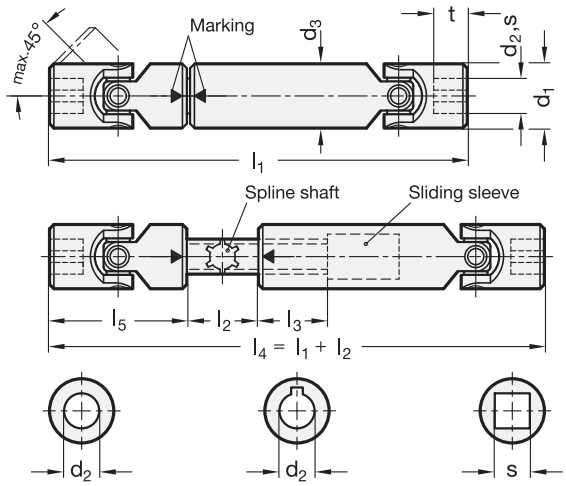

2 Bore code

- **B** without keyway
- **K** with keyway
- **V** with square

1 d_1	3 d_2 H7 Bore		3 s H11 Square	4 l_1 - l_2				d_3	l_3 Guide length	l_5	t min.	
22	K 10	B 10*	V 10*	140-30	160- 40	180- 60	-	22	30	48	12	Permissible r.p.m. and torque → Page 937
22*	K 12	B 12	-	140-30	160- 40	180- 60	-	22	30	62	18	
25	K 12	B 12*	V 12*	160-30	180- 45	200- 70	250-105	26	40	56	13	
25*	K 16	B 16	-	160-30	180- 45	200- 70	250-105	26	40	74	21	
28	K 14	B 14*	V 14*	170-30	200- 60	220- 80	280-140	29	40	60	13	
32	K 16	B 16*	V 16*	190-30	240- 80	275-115	380-210	32	40	68	16	
32*	K 20	B 20	-	190-30	240- 80	275-115	380-210	32	40	86	24	
36	K 18	B 18*	V 18*	230-50	270-100	290-110	400-220	37	40	74	17	
42	K 20	B 20*	V 20*	250-50	320-120	420-220	-	42	45	82	18	
42*	K 25	B 25	-	250-50	320-120	420-220	-	42	45	108	31	
45	K 22	B 22*	V 22*	270-50	330-100	470-240	-	47	50	95	22	
50	K 25	B 25*	V 25*	295-50	350-100	420-170	-	52	50	108	26	
50*	K 30	B 30	-	295-50	350-100	420-170	-	52	50	132	38	
58	K 30	B 30*	V 30*	330-50	400-110	-	-	58	60	122	29	

* not availble from stock, requires a minimum order quantity

Specification

- Steel
  blank
- Joint bearing areas, pins
  case hardened
- *Keyway JS9 DIN 6885 → Page 1124*
- *Cross holes GN 110 → Page 1127*
- *ISO-Fundamental Tolerances → Page 1132*
- RoHS compliant

On request

- different length l_1 - l_2
- with other or unequal bores

Information

Universal joint shafts with needle bearing GN 808.3 do not only bridge the misaligenment of two shafts, but at the same time they offer a length compensation. The power transmission is achive-bed by two universal joints DIN 808 (type EW) a splined shaft and a sliding sleeve.

It is important to check the accuracy when connecting the splined shaft to the sliding sleeve.

The markings → ← have to be opposite to each other. Any kind of mis-connection leads to an inhomogeneous output and to a quick abrasion.

How to order

1 2 3 4
GN 808.3-32-K16-240-80

1	d_1
2	Bore code
3	d_2 (s)
4	l_1 - l_2

Universal joints

for ordinary applications

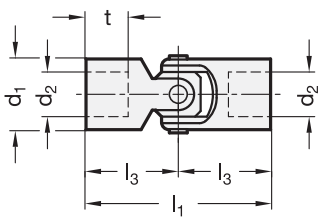

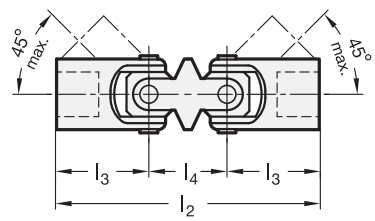

3 Type

EG single, friction bearing
DG double, with friction bearing

1 d_1	2 d_2 H8 Bore	l_1 Type EG	l_2 Type DG	l_3	l_4	t	max. torque in Nm
13	B 8	42	60	21	18	12	2
16	B 10	52	74	26	22	15	3
20	B 12	62	88	31	26	18	6
25	B 16	74	104	37	30	22	12
32	B 20	86	124	43	38	25	24

Specification

- Steel
  - not hardened
  - blackened
- *Cross holes GN 110 → Page 1127*
- *ISO-Fundamental Tolerances → Page 1132*
- RoHS compliant

Information

Universal joints GN 9080 are a simple and very competitively priced variant.

They can only be used for applications with low revolutions. Typical applications are all types of manual operations such as the adjustment of louvers.

How to order		
GN 9080-20-B12-EG (1 2 3)	1	d_1
	2	d_2
	3	Type

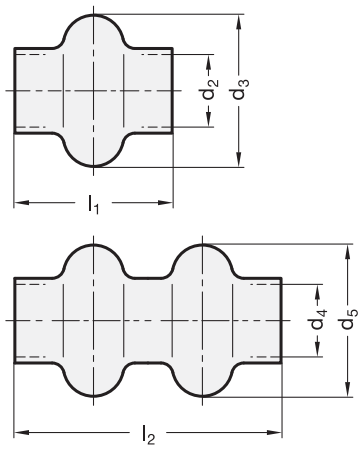

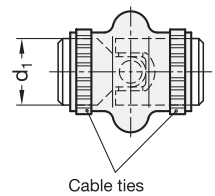

2 Type

E for single joints
D for double joints

1

d_1 Joint-Ø	d_2 Type E	d_3 Type E	d_4 Type D	d_5 Type D	l_1 Type E	l_2 Type D
16	15	28	16	35	34	55
22	20,5	40	20	36	45	65
25	24,5	48	24	44	50	70
28	27,5	52	28	51	56	80
32	30,5	56	32	62	65	90
36	35,5	66	-	-	72	-
42	40	75	40	73	82	120
45	45	84	-	-	95	-
50	50	92	50	90	108	155
58	56	100	-	-	122	-

Specification

2

- Type E — **E**
  Rubber (CR)
  black
- Type D — **D**
  Elastomer plastic
  smooth PVC
  black
- *Elastomer charasteristics* → *Page 1140*
- RoHS compliant

Information

Gaiters GN 808.1 give universal joints full protection against ingress of dirt.

At the same time they can be filled with grease which gives long term lubrication for friction bearings.

The gaiters are secured at each end with two cable ties, which are supplied each sleeve.

How to order		
GN 808.1-25-E (1 2)	1	d_1
	2	Type

Features of general use:

Steel-Specification

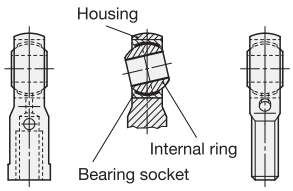

Type **N**
Housing steel, zinc plated
Pairings
Internal ring steel, hardened
Bearing socket brass
lubrication possible.

For general use, and in particular for continuously changing thrst and shock loads ind radial and axial plane.

Type **W**
Housing steel, zinc plated
Pairings
Internal ring steel, hardened
Bearing socket steel, zinc plated with PTFE-insert
self lubricated.

For general use, especially for application nder dynamic operating conditions.
Load bearing capacitiy than Type **N**.

Stainless Steel-Specification

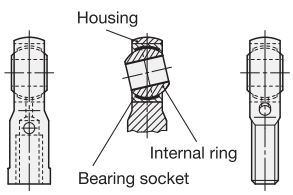

Type **NH**
Housing Stainless Steel
Pairings
Internal ring, hardened, hard chrome plated
Bearing socket bronze
lubrication possible.

As Type **N**
for use in corrosion endangered area.

Type **WH**
Housing Stainless Steel
Pairings
Internal ring steel, hardened
Bearing socket bronze, with PTFE-insert
self lubricated.

As Type **W**
for use in corrosion endangered area.

Type **WK**
Housing Stainless Steel
Pairings
Internal ring Stainless Steel, hardened
Bearing socket Stainless Steel, with PTFE-insert
self lubricated.

As Type **W**
for use in areas where the highest degree of corrosion resistance is of paramount importance. Such as for instance in the food industry.

Bearing play

Bearing play refers to the amount of play by which the internal ring inside a bearing socket without lubrication can be moved either a radial or an axial plane.

Types **N**, **NH** lubrication possible		Types **W**, **WH**, **WK** self lubricated		
d_1 Bore internal ring	Radial bearing play	d_1 Bore internal ring	Radial bearing play	Axial bearing play
5 ... 10	0,005 ... 0,035	5 ... 10	0,005 ... 0,030	2 to 3 times radial play
12 ... 20	0,010 ... 0,040	12 ... 18	0,005 ... 0,035	
22 ... 30	0,010 ... 0,050	20 ... 30	0,005 ... 0,055	

Load applied to obtain the measured results: 100 N at room temperature.

Lubrication

Ball joint heads of type **N** (lubrication possible) require regular lubrication. On delivery the ball joint heads are not lubricated. The initial lubrication takes place when installed. Within the temperature range of -20 °C to +125 °C, a multipurose grease proved to be adequate. Under extreme conditions a high quality grease such as for instance Gleitmo 805 K should be used. Ball joint heads of the type **W** (self lubricated) **must never be lubricated**. The internal ring moves on a PTFE-insert of the bearing socket.

Operating temperature

Ball joint heads of the type **N** (lubrication possible) can be used within the temperature range -50 °C to +200 °C and if use with a high temperature grease even higher. Ball joint heads of the type **W** (self lubricated) can be used in the temperature range of -50 °C bis +200 °C. In general use at higher temperature is possible, but this will of course shorten the working life of the head.

Load values

Load values are bearing related values, arrived at from the raw material data of the basic material of construction used. The latter is used to determine the choice of a ball joint head for a given load. These might, however, have to be reduced to meet the requirements of particular circumstances.

Static load values Co in kN

Co gives the permitted radial static load which can be applied to a ball joint head with the weakest cross section without causing permanent deformation. The Co-values quoted in the catalogue table have been calculated, based on the corresponding raw material specification. Subsequently a random number of the ball joint heads was stress tested at room temperature. Each and every time the stress tests were based on using up to 80 % before the onset of deformation thus leaving a safety factor of 1,25. The static value Co is used to obtain the permissible **axial load** which in general is limited by the mounting strength of the internal bearing. To obtain the maximum axial load Fa tests were carried out at the largest permissible slant angle and the results obtained are shown in the table below:

Fa = 0,4 Co for type N

Fa = 0,2 Co for types NH, W, WH, WK

Dynamic load value C in kN

They help to evaluate the length of life for ball joint heads when use under dynamic conditions.

d_1 Size	static load rating Co GN 648.1 Type N	static load rating Co GN 648.2 Type N	dynamic load rating C GN 648.1/.2 Type N	static load rating Co GN 648.1 Type W	static load rating Co GN 648.2 Type W	dynamic load rating C GN 648.1/.2 Type W	static load rating Co GN 648.5 Type NH/WH/WK	static load rating Co GN 648.6 Type NH/WH/WK	dynamic load rating C GN 648.5/.6 Type N	dynamic load rating C GN 648.5/.6 Type W
5	9,9	4,3	2,5	8	4,3	7,5	11,8	6,2	3,3	7,5
6	11,9	6	3,2	8,9	6	9,3	13,1	8,8	4,3	9,3
8	17,1	11	5,4	14,1	11	16,7	20,7	16,1	7,1	16,7
10	21,4	17,4	7,5	19,3	17,4	23,4	28,3	25,5	10	23,4
12	27	25,5	10	23,5	23,5	32	34,5	34,5	13,5	32
14	24,5	24,5	13	21	21	42	39,5	39,5	17	42
16	37	36,5	16	32	32	52,5	60,5	60,5	21,5	52,5
18	43	43	19,5	38,5	38,5	64	73	73	26	64
20	49,5	49,5	23,5	44	44	78	83	83	31,5	78
22	57	57	29	53	53	97	100	100	38	97
25	68	68	35	62	61	122	118	118	47	122
30	82	82	64	82	82	168	155	155	64	168

Ball joint heads with female thread

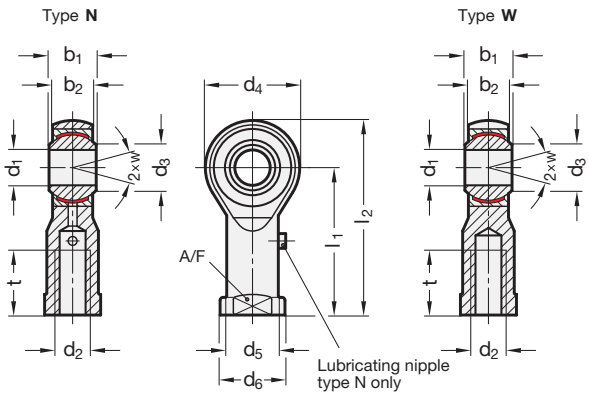

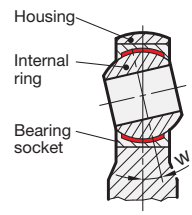

3 Type (pairings)

N Brass / Steel
lubrication possible

W Steel-PTFE / Steel
self lubricated

1 d_1 H7	2 d_2	Left hand thread	CETOP-connector dimensions	b_1 –0,12	b_2	d_3	d_4	d_5	d_6	l_1	l_2	sw	t	w Movement angle
5	M 5	M 5L	M 4	8	6	7,7	18	9	11	27	36	9	10	13°
6	M 6	M 6L	-	9	6,75	8,9	20	10	13	30	40	11	12	13°
8	M 8	M 8L	-	12	9	10,4	24	12,5	16	36	48	13	16	14°
10	M 10	M 10L	M 10 x 1,25	14	10,5	12,9	28	15	19	43	57	17	20	13°
12	M 12	M 12L	M 12 x 1,25	16	12	15,4	32	17,5	22	50	66	19	22	13°
14	M 14	M 14L	-	19	13,5	16,8	36	20	25	57	75	22	25	16°
16	M 16	M 16L	M 16 x 1,5	21	15	19,3	42	22	27	64	85	22	28	15°
18	M 18 x 1,5	M 18 x 1,5L	-	23	16,5	21,8	46	25	31	71	94	27	32	15°
20	M 20 x 1,5	M 20 x 1,5L	-	25	18	24,3	50	27,5	34	77	102	32	33	14°
22	M 22 x 1,5	M 22 x 1,5L	-	28	20	25,8	54	30	37	84	111	32	37	15°
25	M 24 x 2	M 24 x 2L	-	31	22	29,6	60	33,5	42	94	124	36	42	15°
30*	M 30 x 2	M 30 x 2L	-	37	25	34,8	70	40	51	110	145	41	51	17°

* only available in type W

Specification

- Housing Steel
  - zinc plated, blue passivated
  - d_1 = 5 up to 12: machined
  - d_1 = 14 up to 25: forged
- Pairings
  - Type N (lubrication possible)
    Bearing socket
    Brass, CuZn40Al1
    Internal ring
    Steel, 100Cr6
    hardened, ground, polished
  - Type W (self lubricated)
    Bearing socket
    Steel, zinc plated
    with PTFE-Einlage
    Internal ring
    Steel, 100Cr6
    hardened, ground, polished
- *ISO-Fundamental Tolerances → Page 1132*
- RoHS compliant

Information

Ball joint heads GN 648.1 are similar to DIN ISO 12240-4, series K (formerly DIN 648 K).

see also...

- *More information to ball joints as well as load capacity → Page 947*
- *Stainless Steel-Ball joint heads with female thread GN 648.5 → Page 950*

On request

- narrow model (ISO 12240-1, series E)

How to order

GN 648.1-16-M16x1,5-N (1 = 16, 2 = M16x1,5, 3 = N)

1	d_1
2	d_2
3	Type

GN 648.2 Ball joint heads with threaded bolt

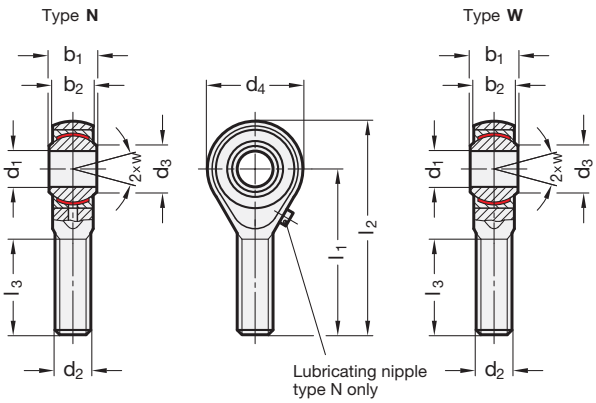

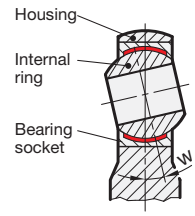

3 Type (pairings)

N Brass / Steel
lubrication possible

W Steel-PTFE / Steel
self lubricated

1 d_1 H7	2 d_2	Left hand thread	b_1 –0,12	b_2	d_3	d_4	l_1	l_2	l_3	w Movement angle
5**	M 5	M 5L	8	6	7,7	18	33	42	20	13°
6	M 6	M 6L	9	6,75	8,9	20	36	46	22	13°
8	M 8	M 8L	12	9	10,4	24	42	54	25	14°
10	M 10	M 10L	14	10,5	12,9	28	48	62	29	13°
12	M 12	M 12L	16	12	15,4	32	54	70	33	13°
14	M 14	M 14L	19	13,5	16,8	36	60	78	38	16°
16	M 16	M 16L	21	15	19,3	42	66	87	40	15°
18	M 18 x 1,5	M 18 x 1,5L	23	16,5	21,8	46	72	95	44	15°
20	M 20 x 1,5	M 20 x 1,5L	25	18	24,3	50	78	103	47	14°
22	M 22 x 1,5	M 22 x 1,5L	28	20	25,8	54	84	111	51	15°
25	M 24 x 2	M 24 x 2L	31	22	29,6	60	94	124	58	15°
30*	M 30 x 2	M 30 x 2L	37	25	34,8	70	110	145	71	17°

* only available in type W ** d_1 = 5 type N no lubrication possible

Specification

- Housing Steel
  - zinc-plated, blue passivated
  - d_1 = 5 up to 12: machined
  - d_1 = 14 up to 25: forged
- Pairings
  - Type N (lubrication possible)
    Bearing socket
    Brass, CuZn40Al1
    Internal ring
    Steel, 100Cr6
    hardened, ground, polished
  - Type W (self lubricated)
    Bearing socket
    Steel, zinc plated
    with PTFE-insert
    Internal ring
    Steel, 100Cr6
    hardened, ground, polished
- *ISO-Fundamental Tolerances → Page 1132*
- RoHS compliant

Information

Ball joint heads GN 648.2 are similar to DIN ISO 12240-4, series K (formerly DIN 648 K).

see also ...
- *More information to ball joints as well as load capacity → Page 947*
- *Stainless Steel-Ball joint heads with threaded bolt GN 648.6 → Page 951*

On request

- narrow model (ISO 12240-1, series E)

How to order

GN 648.2-10-M10L-W (1 = d_1, 2 = d_2, 3 = Type)

Type **NH**

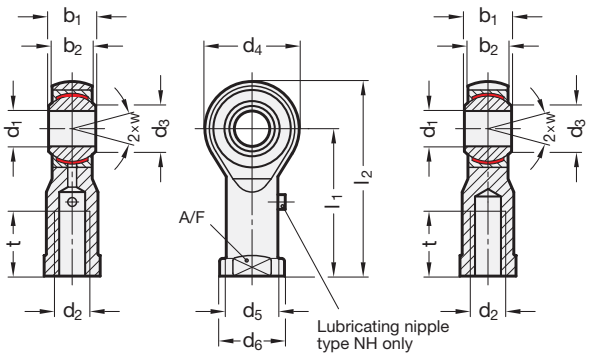

Type **WH**

Type **WK**

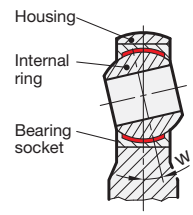

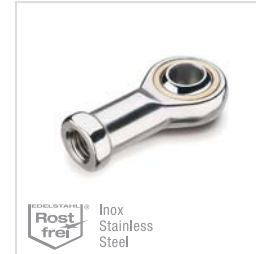

3 Type (Pairings)

NH Bronze / Steel
lubrication possible

WH Bronze-PTFE / Steel
self lubricated

WK Stainless Steel-PTFE / Stainless Steel
self lubricated

1 d_1 H7	2 d_2	Left hand thread	b_1 −0,12	b_2	d_3	d_4	d_5	d_6	l_1	l_2	sw	t	w Movment angle
5	M 5	M 5L	8	6	7,7	18	9	11	27	36	9	10	13°
6	M 6	M 6L	9	6,75	8,9	20	10	13	30	40	11	12	13°
8	M 8	M 8L	12	9	10,4	24	12,5	16	36	48	13	16	14°
10	M 10	M 10L	14	10,5	12,9	28	15	19	43	57	17	20	13°
12	M 12	M 12L	16	12	15,4	32	17,5	22	50	66	19	22	13°
14	M 14	M 14L	19	13,5	16,8	36	20	25	57	75	22	25	16°
16	M 16	M 16L	21	15	19,3	42	22	27	64	85	22	28	15°
18	M 18 x 1,5	M 18 x 1,5L	23	16,5	21,8	46	25	31	71	94	27	32	15°
20	M 20 x 1,5	M 20 x 1,5L	25	18	24,3	50	27,5	34	77	102	32	33	14°
22	M 22 x 1,5	M 22 x 1,5L	28	20	25,8	54	30	37	84	111	32	37	15°
25	M 24 x 2	M 24 x 2L	31	22	29,6	60	33,5	42	94	124	36	42	15°
30	M 30 x 2	M 30 x 2L	37	25	34,8	70	40	51	110	145	41	51	17°

Specification

- Housing Stainless Steel AISI 431 forged, polished
- Pairings
  - Type NH (lubrication possible)
    Bearing socket Bronze CuSn8
    Internal ring Steel 100Cr6 hardened, ground, polished, **hard chrome plated**
  - Type WH (self lubricated)
    Bearing socket Bronze CuSn8 with PTFE-insert
    Internal ring Steel 100Cr6 hardened, ground, polished, **hard chrome plated**
  - Type WK (self lubricated)
    Bearing socket, Stainless Steel AISI 316Ti with PTFE-insert
    Internal ring Stainless Steel AISI 420 hardened, ground, polished
- RoHS compliant

Information

Stainless Steel-Ball joint heads GN 648.5 are similar to DIN ISO 12240-4, series K (formerly DIN 648 K).

see also...
- *More information to ball joint heads as well as load capacity → Page 947*
- *Ball joint heads with female thread GN 648.1 (Steel, zinc plated) → Page 948*

On request

- narrow model (ISO 12240-1, series E)

How to order

GN 648.5-10-M10L-WH (1 – 2 – 3)

1	d_1
2	d_2
3	Type

Type **NH**

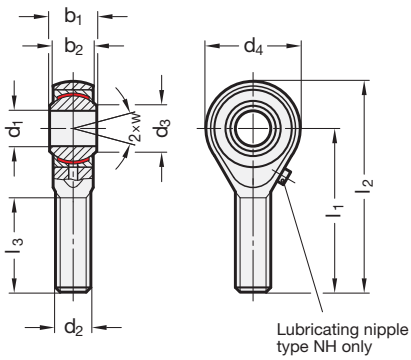

Type **WH**
Type **WK**

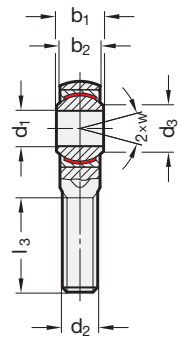

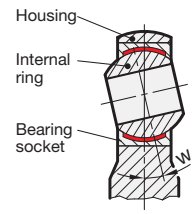

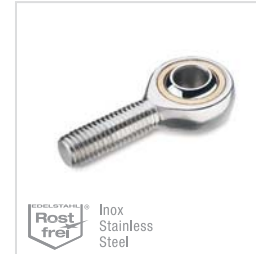

3 Type (Pairings)

NH Bronze / Steel lubrication possible
WH Bronze-PTFE / Steel self lubricated
WK Stainless Steel-PTFE / self lubricated

1 d_1 H7	2 d_2	Left hand thread	b_1 –0,12	b_2	d_3	d_4	l_1	l_2	l_3	w Movement angle
5*	M 5	M 5L	8	6	7,7	18	33	42	20	13°
6	M 6	M 6L	9	6,75	8,9	20	36	46	22	13°
8	M 8	M 8L	12	9	10,4	24	42	54	25	14°
10	M 10	M 10L	14	10,5	12,9	28	48	62	29	13°
12	M 12	M 12L	16	12	15,4	32	54	70	33	13°
14	M 14	M 14L	19	13,5	16,8	36	60	78	38	16°
16	M 16	M 16L	21	15	19,3	42	66	87	40	15°
18	M 18 x 1,5	M 18 x 1,5L	23	16,5	21,8	46	72	95	44	15°
20	M 20 x 1,5	M 20 x 1,5L	25	18	24,3	50	78	103	47	14°
22	M 22 x 1,5	M 22 x 1,5L	28	20	25,8	54	84	111	51	15°
25	M 24 x 2	M 24 x 2L	31	22	29,6	60	94	124	58	15°
30	M 30 x 2	M 30 x 2L	37	25	34,8	70	110	145	71	17°

* d_1 = 5 type N no lubrication possible

Specification

- Housing Stainless Steel AISI 431 forged, polished
- Pairings
  - Type NH (lubrication possible)
    Bearing socket Bronze CuSn8
    Internal ring Steel 100Cr6 hardened, ground, polished, **hard chrome plated**
  - Type WH (self lubricated)
    Bearing socket Bronze CuSn8 with PTFE-insert
    Internal ring Steel 100Cr6 hardened, ground, polished, **hard chrome plated**
  - Type WK (self lubricated)
    Bearing socket, Stainless Steel AISI 316Ti with PTFE-insert
    Internal ring, Stainless Steel AISI 420 hardened, ground, polished
- RoHS compliant

Information

Stainless Steel-Ball joint heads GN 648.6 are similar to DIN ISO 12240-4, series K (formerly DIN 648 K).

see also...
- *More information to ball joint heads as well as load capacity → Page 947*
- *Ball joint heads with threaded bolt GN 648.2 (Steel, zinc plated) → Page 949*

On request

- narrow model (ISO 12240-1, series E)

How to order

GN 648.6-16-M16-NH (1 2 3)

1	d_1
2	d_2
3	Type

Fork joints

Fork head DIN 71752, Steel

Fork head DIN 71752

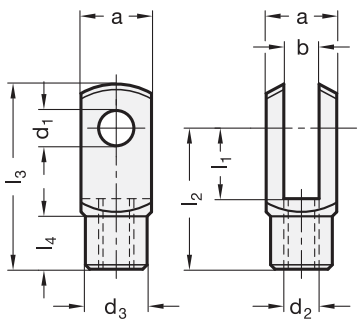

Fork joints GN 751

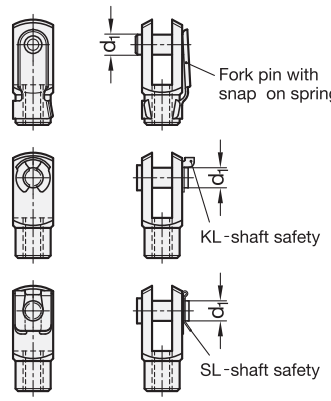

4 Type

B Pin with snap-on spring
KL Pin with KL-shaft safety
SL Pin with SL-shaft safety (only for d_1 = 4...16)

1 d_1 H9/h11	2 l_1		3 d_2			a	b	d_3	l_2		l_3		l_4
				Left hand thread	Fine thread								
4	8	16*	M 4	M 4L	-	8	4	8	16	24	21	29	6
5	10	20	M 5	M 5L	-	10	5	9	20	30	26	36	7,5
6	12	24	M 6	M 6L	-	12	6	10	24	36	31	43	9
8	16	32	M 8	M 8L	M 8F = M 8 x 1	16	8	14	32	48	42	58	12
10	20	40	M 10	M 10L	M 10F = M10 x 1,25	20	10	18	40	60	52	72	15
12	24	48	M 12	M 12L	M 12F = M12 x 1,25	24	12	20	48	72	62	86	18
14	28	56	M 14	M 14L	M 14F = M14 x 1,5	27	14	24	56	85	72	101	22,5
16	32	64	M 16	M 16L	M 16F = M16 x 1,5	32	16	26	64	96	83	115	24
20*	40	-	M 20	M 20L	-	40	20	34	80	-	105	-	30

* Type B is not availble from stock

Specification

- Steel
  - Tensile strength class 5 (500 N/mm²)
  - zinc plated, blue passivated
- Shaft safetys
  - spring sheet metal
  - hardened and tempered
  - zinc plated, blue passivated
- *ISO-Fundamental Tolerances → Page 1132*
- RoHS compliant

Information

Fork joints GN 751 consists of a fork head according DIN 71752 and a fork pin with KL-shaft (Type KL and SL) a fork pin with snap-on spring (Type B). Both versions can be dismantled without tools and moniter.

Size d_1 = 12 is supplied with a fine thread M12x1,5 according to DIN. In practice, however, M12x1,25 is preferred. Standard DIN 71752 does not foresee size d_1 = 20.

see also...
- *Fork joints (Aluminium) GN 751 → Page 954*

Fork joint		
GN 751-10-20-M10-B (1 2 3 4)	1	d_1
	2	l_1
	3	d_2
	4	Type

Fork head without pin		
DIN 71752-10-40-M10L (1 2 3)	1	d_1
	2	l_1
	3	d_2

Types of fork joint shafts

Snap-on spring

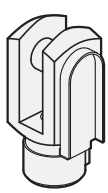

The snap-on spring is easily mounted and dismantled. It is therefore particularly suitable for applications where the articulated connection needs to be loosened often.

KL-shaft safety

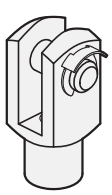

The KL-shaft safety ring can be fitted and dismantled without tools, i.e. by hand.

SL-shaft safety

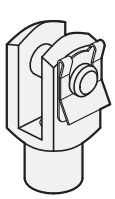

The SL-shaft safety ring requires a tool for dismantling (e.g. a screw driver). It is therefore better secured.

Fork joints

Fork head DIN 71752, Aluminium

Fork head DIN 71752

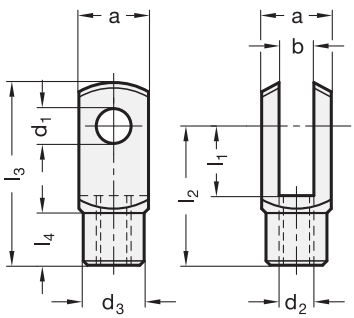

Fork joints GN 751

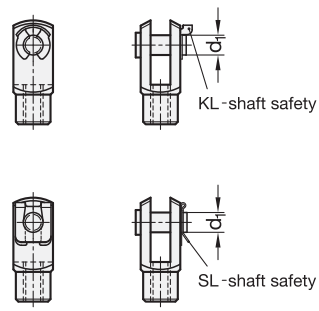

4 Type

KL Pin with KL-shaft safety
SL Pin with SL-shaft safety

1 d_1 h11	2 l_1		3 d_2	a	b	d_3	l_2		l_3		l_4
4	8	16*	M 4	8	4	8	16	24	21	29	6
5	10	20*	M 5	10	5	9	20	30	26	36	7,5
6	12	24*	M 6	12	6	10	24	36	31	43	9
8	16	32*	M 8	16	8	14	32	48	42	58	12
10	20	40*	M 10	20	10	18	40	60	52	72	15
12	24	48*	M 12	24	12	20	48	72	62	86	18
14	28	56*	M 14	27	14	24	56	85	72	101	22,5
16	32	64*	M 16	32	16	26	64	96	83	115	24

* not availble from stock, requires a minimum order quantity

Specification

5

- Aluminium anodized, black — **AL**
- KL- / SL-shaft safetys
  - Spring steel
  - hardened and tempered
  - zinc plated, blue passivated
- *ISO-Fundamental Tolerances → Page 1132*
- RoHS compliant

Information

Fork joints GN 751 in Aluminium consist of a fork head according DIN 71752 and a pin with KL-shaft safety or SL-shaft safety.

Owing to the anodized coating of the fork head and of the bolt, the bearing is virtually non-wearing.

see also...
- *Fork joints (Steel) GN 751 → Page 952*
- *Stainless Steel-Fork joints GN 751 → Page 955*

Fork joint

1 2 3 4 5
GN 751-8-16-M8-SL-AL

1	d_1
2	l_1
3	d_2
4	Type
5	Material

Fork head without pin

1 2 3 4
DIN 71752-12-24-M12-AL

1	d_1
2	l_1
3	d_2
4	Material

Stainless Steel-Fork joints

Stainless Steel-Fork heads DIN 71752

Fork head DIN 71752

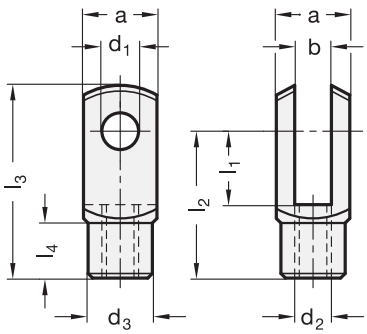

Fork joint GN 751

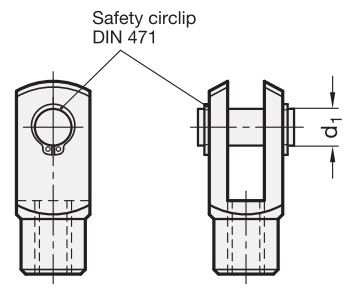

Inox Stainless Steel

4 Type

A Pin with safety circlip DIN 471

1 d_1 H9/h11	2 l_1		3 d_2	a	b	d_3	l_2		l_3		l_4
4	8	16	M 4	8	4	8	16	24	21	29	6
5	10	20	M 5	10	5	9	20	30	26	36	7,5
6	12	24	M 6	12	6	10	24	36	31	43	9
8	16	32	M 8	16	8	14	32	48	42	58	12
10	20	40	M 10	20	10	18	40	60	52	72	15
12	24	48	M 12	24	12	20	48	72	62	86	18
14	28	56	M 14	28	14	24	56	85	72	101	22,5
16	32	64	M 16	32	16	26	64	96	83	115	24
20	40	-	M 20	40	20	34	80	-	105	-	30

Specification

5

- Stainless Steel AISI 303 **NI**
  - matt, shot-blasted
- Safety circlip DIN 471
  Stainless Steel
  German Material No. 1.4122
- *ISO-Fundamental Tolerances → Page 1132*
- *Stainless Steel characteristics → Page 1144*
- RoHS compliant

Information

Stainless Steel-Fork joints GN 751 consists of a fork head according to DIN 71752 and a pin with two safety circlips DIN 471.

Standard DIN 71752 does not foresee size d_1 = 20.

see also...

- *Fork joints (Steel) GN 751 → Page 952*
- *Fork joints (Aluminium) GN 751 → Page 954*

Stainless Steel-Fork joint

1 2 3 4 5
GN 751-8-16-M8-A-NI

1	d_1
2	l_1
3	d_2
4	Type
5	Material

Stainless Steel-Fork head without pin

1 2 3 5
DIN 71752-6-24-M6-NI

1	d_1
2	l_1
3	d_2
5	Material

Joint pieces

for Fork joints GN 751

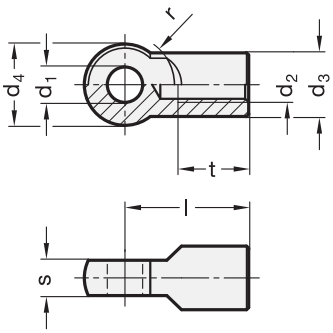

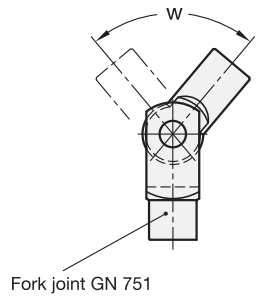

Rost frei — Inox Stainless Steel

1 d_1 H9	2 d_2	d_3	d_4	Length l	r	s –0,2	t min.	w min.
6	M 6	10	14	22	8,5	6	12	218°
8	M 8	14	18	29	12	8	16	218°
10	M 10	18	23	35	14	10	20	212°
12	M 12	20	27	43	17	12	24	216°
14	M 14	24	30	50	19	14	28	214°
16	M 16	26	36	56	22	16	32	216°

Specification

3

- Steel
  - Tensile strength class 5 (500 N/mm²)
  - zinc plated, blue passivated
- Stainless Steel AISI 303 **NI**
- *ISO-Fundamental Tolerances → Page 1132*
- *Stainless Steel characteristics → Page 1144*
- RoHS compliant

Information

Joints pieces GN 752 are designed to be used in combination with fork heads DIN 71752 respectively fork joints GN 751.

see also...

- *Swing nuts GN 444.2 → Page 518*
- *Fork head DIN 71752 (Steel) → Page 952*
- *Forkl joints GN 751 (Steel) → Page 952*

Steel-Joint piece		
GN 752-10-M10 (1 = 10, 2 = M10)	1	d_1
	2	d_2

Stainless Steel-Joint piece		
GN 752-8-M8-NI (1 = 8, 2 = M8, 3 = NI)	1	d_1
	2	d_2
	3	Material

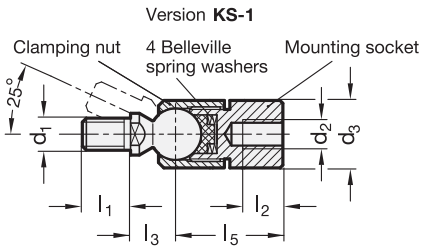

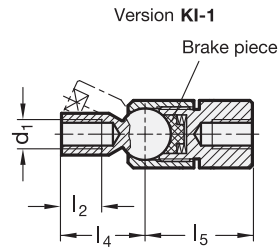

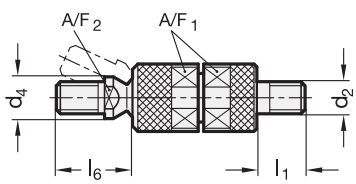

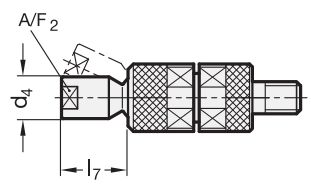

2 Type

KS Ball with male thread
KI Ball with female thread

3 Identification No.

1 Mounting socket with female thread
2 Mounting socket with male thread

1

d_1	d_2	d_3	d_4	l_1	l_2	l_3	l_4	l_5 $^{+1,0}_{-0,3}$	l_6 ≈	l_7 ≈	A/F_1	A/F_2	recommended tightening torque in Nm
M 8	M 8	19	11	12	10	12,5	23	29,5	19,5	18	17	9	17
M 10	M 10	21	13	15	12	14	26	33,5	23,5	20	19	11	34

Specification

- Steel
  zinc plated, blue passivated
- Brake piece
  Technopolymer (Polyamide PA)
- RoHS compliant

Information

The clamping nut of the ball joints GN 782 can be set to give a required thrust on the Belleville spring washers in order to increase the resistance to the ball movement.

At the same time the Belleville spring washers act as safety washers for the screws.

Once the max. thrust to the Belleville spring washers is reached the ball arm is firmly immobilised in position over the clamping nut and screw.

How to order		
GN 782-M10-KS-1 (1 2 3)	1	d_1
	2	Type
	3	Identification No.

Angled ball joints

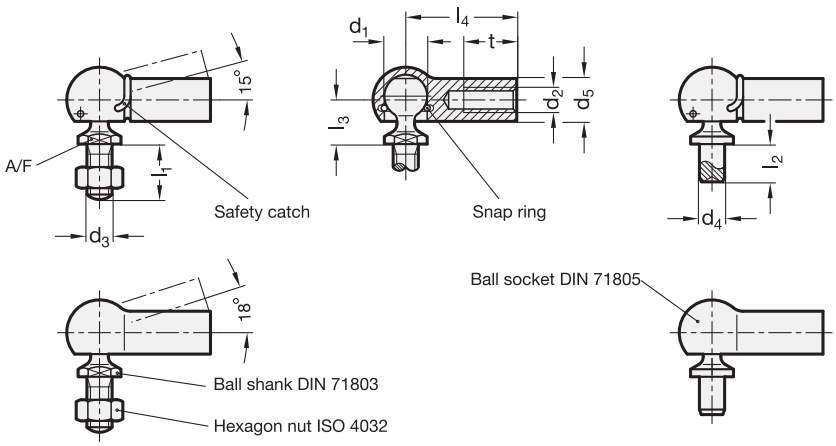

4 Type

- **CS** with threaded ball shank with safety catch
- **C** with threaded ball shank without safety catch
- **BS** with rivet ball shank, with safety catch
- **B** with rivet ball shank, without safety catch

1 d_1 H9/h9	2 d_2	Left hand thread	3 l_2		d_3	d_4 h11	d_5	l_1	l_3	l_4	t min.	A/F	min. pull-off force in N
8	M 5	M 5L	4	7,5	M 5	5	8	10	9	22	10,5	7	30
10	M 6	M 6L	4,5	8	M 6	6	10	12,5	11	25	11,5	8	40
13	M 8	M 8L	5	10	M 8	8	13	16,5	13	30	14	11	60
16	M 10	M 10L	6	13	M 10	10	16	20	16	35	15,5	13	80
16	M 12	M 12L	6	13	M 12	10	16	20	16	35	15,5	13	80
19	M 14F (≙M 14 x 1,5)	M 14FL (≙M 14 x 1,5L)	12	18	M 14F (≙M 14 x 1,5)	14	22	28	20	45	21,5	16	100

Specification

- Steel
  - Tensile strength class 5 (500 N/mm²)
  - zinc plated, colourless passivated
- Ball
  Steel
  - hardened
  - ball seat lubricated
- *ISO-Fundamental tolerances → Page 1132*
- RoHS compliant

On request

- smooth specification (Ball seat with play)
- Ball studs DIN 71803
- Ball sockets DIN 71805
- Axial joints (ball socket and ball shank in one axis)

Information

Angled ball joints DIN 71802 consist of a ball socket DIN 71805 and a ball shank DIN 71803.

The angle of rotation for the type with safety catch (Type CS, BS) is 15°, without safety catch (Type C, B) is 18°.

For assembly the ball ist pushed through the circlip which acts as a retainer. Should the retaining force (see pull-off force in the table above) between ball and socket not be sufficient, this can be increased by adding a safety catch, which can easily be fitted.

To protect the angled ball point, a dust cap GN 710 can be added.

The hexagon nut is part of the angled ball joints.

Dust caps GN 710 → *Page 960* have to be ordered seperately.

Angled ball joints with threaded ball shank

1 2 4
DIN 71802-19-M14FL-CS

1	d_1
2	d_2
4	Type

Angled ball joints with rivet ball shank

1 2 3 4
DIN 71802-13-M8-10-B

1	d_1
2	d_2
3	l_2
4	Type

Stainless Steel-Angled ball joints

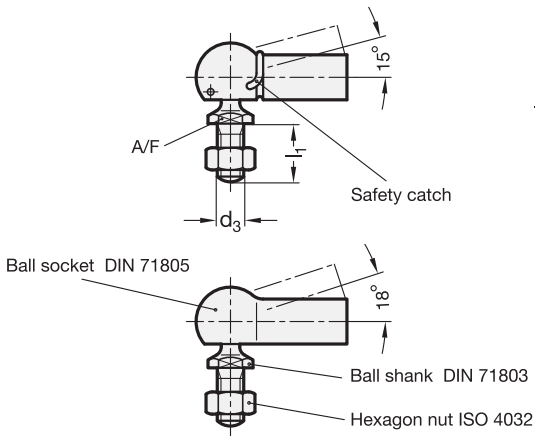

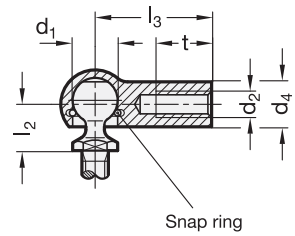

Rost frei — Inox Stainless Steel

3 Type

CSN with threaded ball shank, with safety catch

CN with threaded ball shank, without safety catch

1 d_1 H9/h9	2 d_2	Left hand thread	d_3	d_4	l_1	l_2	l_3	t min.	A/F	min. pull-off force in N
8	M 5	M 5L	M 5	8	10	9	22	10,5	7	30
10	M 6	M 6L	M 6	10	12,5	11	25	11,5	8	40
13	M 8	M 8L	M 8	13	16,5	13	30	14	11	60
16	M 10	M 10L	M 10	16	20	16	35	15,5	13	80
16	M 12	M 12L	M 12	16	20	16	35	15,5	13	80
19	M 14F (≙M 14 x 1,5)	M 14FL (≙M 14 x 1,5L)	M 14F (≙M 14 x 1,5)	22	28	20	45	21,5	16	100

Specification

- Stainless Steel AISI 303
- Ball
  Stainless Steel
  - not hardened
  - ball seat greased
- *ISO-Fundamental Tolerances → Page 1132*
- RoHS compliant

On request

- smooth specification (Ball seat with play)
- Ball studs DIN 71803
- Ball sockets DIN 71805
- Axial joints (ball socket and ball shank in one axis)

Information

Stainless Steel-Angled ball joints DIN 71802 consist of a ball socket DIN 71805 and a ball shank DIN 71803.

The angle of rotation for the type with safety catch (Type CSN) is 15°, without safety catch (Type CN) is 18°.

For assembly the ball ist pushed through the circlip which acts as a retainer. Should the retaining force (see pull-off force in the table above) between ball and socket not be sufficient, this can be increased by adding a safety catch, which can easily be fitted.

To protect the angled ball point, a dust cap GN 710 can be added.

The hexagon nut is part of the angled ball joints.

Dust caps GN 710 → *Page 960* have to be ordered seperately.

How to order		
DIN 71802-10-M6L-CN (1 2 3)	1	d_1
	2	d_2
	3	Type

Dust caps

for angled ball joints DIN 71802

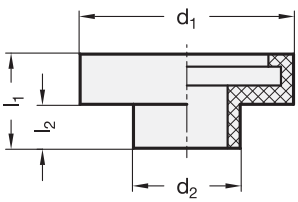

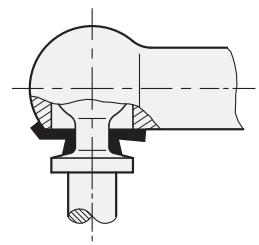

1

d_1	d_2	l_1	l_2	for angled ball joints DIN 71802 Size (d_1)
12	5,5	4,5	1,5	8
13,5	7	6,5	3,5	10
17,5	8,5	7,5	3,5	13
22	10,5	8,5	4,5	16
25,5	12,5	12,5	7	19

Specification

- Rubber (CR)
  - temperature resistant up to 110 °C
  - black
- *Elastomer characteristics → Page 1140*
- RoHS compliant

On request

- Angled ball joints with mounted dust cap

Information

Dust caps GN 710 prevent the entering of dirt into angled ball joints DIN 71802.

see also...

- *Angled ball joints DIN 71802 → Page 958*
- *Stainless Steel-Angled ball joints DIN 71802 → Page 959*

How to order		
1 GN 710-17,5	1	d_1

Quick-fit couplings

with radial off-set compensation

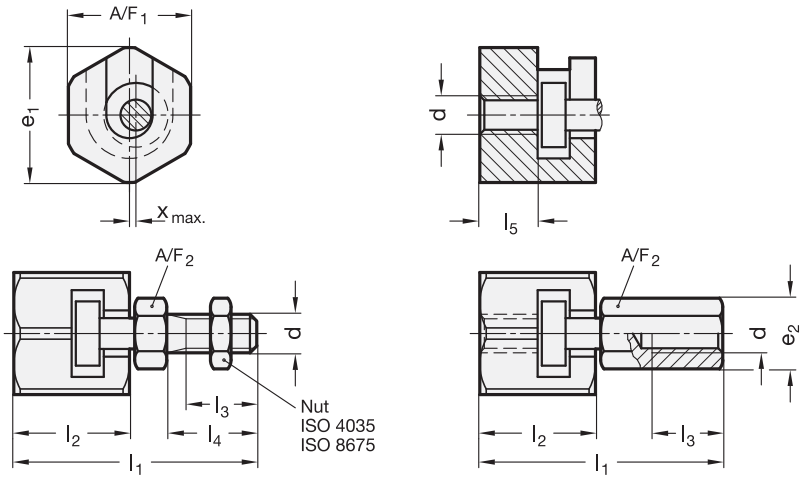

2 Type

A with male thread
B with female thread

1

d		e_1	e_2 ≈	l_1 ≈	l_2	l_3 min.	l_4	l_5 +1	A/F_1	A/F_2	x max. shaft off-set	max. pull- /push load in kN
M 6	-	21	11	37,5	18	11	14	9	19	10	0,6	2,5
M 8	-	26	14,5	45	22,5	13,5	17	11,5	24	13	0,7	4,5
M 10	M 10 x 1,25	30	19	56	29	16	20	16	27	17	0,7	6,5
M 12	M 12 x 1,25	32,5	21	66,5	34	21	25	17	30	19	0,8	10
M 16	M 16 x 1,5	39	27	83	42	25	30	23	36	24	1	18
M 20	M 20 x 1,5	44	34	93,5	45,5	29	35	23,5	41	30	1	30

Specification

- Steel
  - tempered
  - phosphated
- RoHS compliant

Information

Quick-fit couplings GN 240 have been designed for the purpose of compensating a radial shaft off-set x. A typical application is the axial link to a piston rod of a cylinder operating in any type of fixture or system.

The coupling is **not** designed for the transfer of torque.

see also...

- *Quick-fit couplings GN 240.1 (with radial off-set compensation) → Page 962*
- *Quick-fit couplings GN 240.2 (with angle- and radial off set compensation) → Page 963*

How to order		
GN 240-M20x1,5-A (1 = d, 2 = Type)	1	d
	2	Type

Quick-fit couplings

with radial off-set compensation

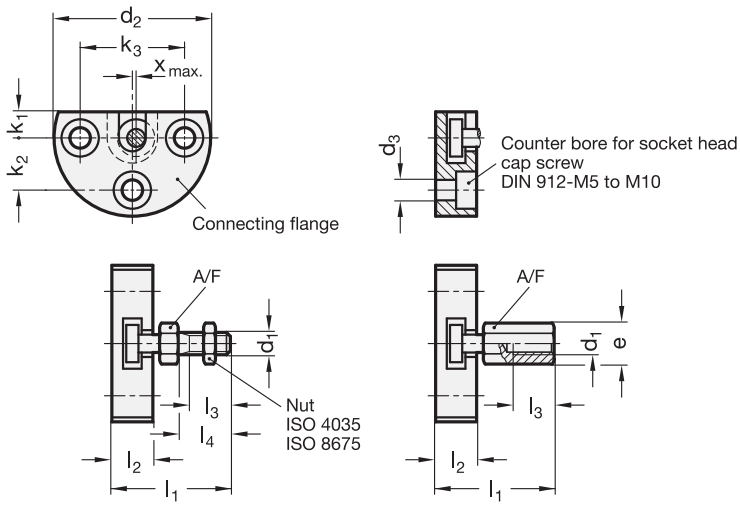

2 Type

A with male thread
B with female thread

1

d_1		d_2	d_3	e ≈	k_1	k_2	k_3	l_1 ≈	l_2	l_3 min. Type A	Type B	l_4	A/F	x max. shaft off-set	max. pull- /push load in kN
M 6	-	42	5,5	11	7	14	28	30,5	11	11	11	14	10	0,6	2,5
M 8	-	48	6,5	14,5	8	16	32	35,5	13	13,5	13,5	17	13	0,7	4,5
M 10	M 10 x 1,25	50	6,5	19	9	17	34	43	16	16	15	20	17	0,7	6,5
M 12	M 12 x 1,25	55	6,5	21	10	19	38	53	20,5	21	17,5	25	19	0,8	10
M 16	M 16 x 1,5	65	9	27	12,5	22,5	45	64	23	25	22	30	24	1	18
M 20	M 20 x 1,5	80	11	34	17	28	56	74	26	29	25	35	30	1	30

Specification

- Steel
  - tempered
  - phosphated
- RoHS compliant

Information

Quick-fit couplings GN 240.1 have been designed for the purpose of compensating in radial shaft-off-set x. A typical application is the axial link to a piston rod of a cylinder operating any type of fixture or system.

The coupling is **not** designed for the transfer of torque.

see also...

- *Quick-fit couplings GN 240 (with radial off-set compensation) → Page 961*

How to order		
GN 240.1-M12x1,25-B (1 = d_1, 2 = Type)	1	d_1
	2	Type

Quick-fit couplings

with angle- and radial off-set compensation

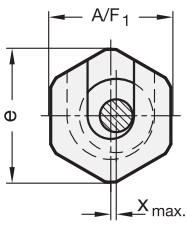

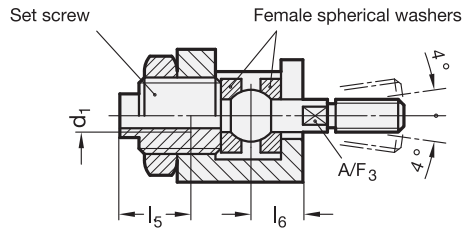

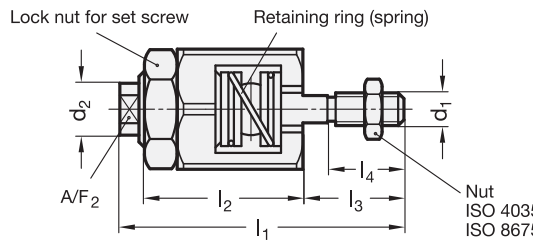

1

d_1		d_2	e	l_1 ≈	l_2	l_3	l_4	l_5 min.	l_6	A/F_1	A/F_2	A/F_3	x max. shaft off-set	max. pull- /push load in kN
M 6	-	9,5	24,5	52	29	18,5	14	13	9,5	22	8	5	0,6	2,5
M 8	-	15	30	63	33	23,5	18	16	11,5	27	13	7	0,7	4,5
M 10	M 10 x 1,25	21	44	81	43	30,5	22	24	16	41	18	12	0,7	6,5
M 12	M 12 x 1,25	21	44	85	43	34,5	26	24	16	41	18	12	0,8	10
M 16	M 16 x 1,5	32	60	121	62	45	34	34	26	55	27	18	1	18
M 20	M 20 x 1,5	32	60	129	62	53	42	34	26	55	27	18	1	30

Specification

- Steel
  - tempered
  - phosphated
- Retaining ring (spring)
  Stainless Steel AISI 631
- RoHS compliant

Information

Quick-fit couplings GN 240.2 have been designed to compensate a **radial** and **angular** off-set. Furthermore they are axially **freely** adjustable via the set screw.

A typical application is the axial link to a piston rod of a cylinder operating in any type of fixture or system.

The coupling is renowned by its very compact construction without any loose components.

It is **not** designed for the transfer of torque.

see also...
- *Quick-fit couplings GN 240 (with radial off-set compensation) → Page 961*

How to order		
1 GN 240.2-M20x1,5	1	d_1