3.1 Indexing plungers Locking pins Spring plungers

GN 617
Indexing plungers
Steel /
Plastic knob
Inch
→ Page 416

GN 618
Indexing plungers
without thread
Steel /
Plastic knob
→ Page 419

GN 817
Indexing plungers
Stainless Steel
Plastic knob
Rost-frei
Inch
→ Page 422

GN 617
Indexing plungers
Stainless Steel
Plastic knob
Rost-frei
Inch
→ Page 416

GN 617.1
Indexing plungers
with rest position
Steel / Plastic knob
Inch
→ Page 420

GN 817.2
Indexing plungers
Steel /
long plastic knob
→ Page 423

GN 617
Indexing plungers
Stainless Steel
Rost-frei
Inch
→ Page 416

GN 617.1
Indexing plungers
w. rest position
Stainless Steel /
Plastic knob
Rost-frei
Inch
→ Page 420

GN 817.2
Indexing plungers
Stainless Steel /
long plastic knob
Rost-frei
→ Page 423

GN 613
Indexing plungers
without collar
Steel /
Plastic knob
→ Page 418

GN 617.1
Indexing plungers
w. rest position
Stainless Steel
Rost-frei
Inch
→ Page 420

GN 817.3
Indexing plungers
for precision
locating
Steel / Plastic knob
→ Page 424

GN 613
Indexing plungers
without collar
Stainless Steel /
Plastic knob
Rost-frei
→ Page 418

GN 717
Indexing plungers
Steel
Inch
→ Page 421

GN 817.4
Indexing plungers
with T-handle
Steel / Plastic knob
→ Page 425

GN 613
Indexing plungers
without collar
Stainless Steel
Rost-frei
→ Page 418

GN 717
Indexing plungers
Stainless Steel
Rost-frei
Inch
→ Page 421

GN 817.4
Indexing plungers
with T-handle
Stainless Steel /
Plastic knob
→ Page 425

GN 613.1
Screw drivers
for GN 613
→ Page 418

GN 817
Indexing plungers
Steel /
Plastic knob
Inch
→ Page 422

GN 607
Indexing plungers
Steel /
Plastic knob
→ Page 426

Rost-frei Stainless Steel | Ergostyle | SOFT Softline | CLEAN Cleanline | SAN Sanline | Ex ATEX | ESD ESD | Inch Inch

3.1 Indexing plungers, Locking pins, Spring plungers

GN 607
Indexing plungers
Stainless Steel / Plastic knob

→ *Page 426*

GN 607.5
Indexing plungers
for welding
with rest position

→ *Page 431*

GN 822.6
Mini indexing plungers
Steel / Plastic knob

→ *Page 435*

GN 607.1
Indexing plungers
with rest position
Steel / Plastic knob

→ *Page 427*

GN 608
Indexing plungers
Plunger Steel

→ *Page 432*

GN 822.7
Mini indexing plungers
Stainless Steel / Plastic knob

→ *Page 435*

GN 607.1
Indexing plungers
with rest position
Stainless Steel / Plastic knob

→ *Page 427*

GN 608.5
Indexing plungers
Plunger
Stainless Steel

→ *Page 432*

GN 822.8
Mini indexing plungers
Zinc die casting / Plastic knob

→ *Page 436*

GN 607.2
Indexing plungers
for installation
in thin walled
equipment

→ *Page 428*

GN 608.1
Indexing plungers
with rest position
Plunger Steel

→ *Page 433*

GN 822.1
Mini indexing plungers
Open indexing mechanism
Steel / Plastic knob

→ *Page 437*

GN 607.9
Double ring spanner

→ *Page 428*

GN 608.6
Indexing plungers
with rest position
Plunger
Stainless Steel

→ *Page 433*

GN 822.1
Mini indexing plungers
Open mechanism
Stainless Steel / Plastic knob

→ *Page 437*

GN 607.3
Indexing plungers
with rest position,
for installation
in thin walled
equipment

→ *Page 429*

GN 822
Mini indexing plungers
Steel / Plastic knob

→ *Page 434*

GN 417
Indexing plungers
without rest position

→ *Page 438*

GN 607.4
Indexing plungers
for welding

→ *Page 430*

GN 822
Mini indexing plungers
Stainless Steel / Plastic knob

→ *Page 434*

GN 417
Indexing plungers
with rest position

→ *Page 439*

Stainless Steel | Ergostyle | Softline | Cleanline | Sanline | ATEX | ESD | Inch

GN 816
Locking plungers
Plunger protruded

→ Page 440

GN 816
Locking plungers
Plunger protruded
with key

→ Page 440

GN 816-10
Keys
for locking
plungers GN 816

→ Page 440

GN 816.1
Locking plungers
Plunger retracted

→ Page 442

GN 816.1
Locking plungers
Plunger retracted
with key

→ Page 442

GN 816.1-10
Keys
for locking
plungers GN 816.1

→ Page 442

GN 414
Safety
indexing plungers

→ Page 444

GN 514
Locking plungers
Push-Push-
locking mechanism

→ Page 445

GN 7336.7
Clamping knobs
with indexing
plungers

→ Page 446

GN 7336.8
Clamping
indexing plungers
with safety function

→ Page 447

GN 313
Spring bolts
Steel / Plastic knob

→ Page 449

GN 313
Spring bolts
Stainless Steel /
Plastic knob

→ Page 449

GN 609
Distance bushings
for indexing
plungers
Steel

→ Page 450

GN 609.5
Distance
bushings
for indexing
plungers
Stainless Steel

→ Page 450

GN 909
Flat
hexagon nuts
Steel

→ Page 451

GN 909.5
Flat
hexagon nuts
Stainless Steel

→ Page 451

GN 412.1
Mounting blocks
for cam action
indexing plungers
Zinc die casting

→ Page 452

GN 612.1
Mounting blocks
for cam action
indexing plungers
Steel

→ Page 453

GN 612.1
Mounting
blocks
for cam action
indexing plungers
Stainless Steel

→ Page 453

GN 412.2
Positioning
bushings
for cam action
indexing plungers

→ Page 454

GN 412.3
Positioning
bushings
for cam action
indexing plungers

→ Page 455

Stainless Steel | Ergostyle | Softline | Cleanline | Sanline | ATEX | ESD | Inch

GN 612
Cam action indexing plungers
Steel

→ Page 456

GN 612
Cam action indexing plungers
Stainless Steel

→ Page 456

GN 612.2
Cam action indexing plungers
with flange for surface mounting

→ Page 457

GN 612.3
Cam action indexing plungers
for welding

→ Page 458

GN 612.8
Cam action indexing plungers
Zinc die casting

→ Page 457

GN 612.9
Cam action indexing plungers
with flange for surface mounting

→ Page 458

GN 722.1
Spring latches
for welding

→ Page 461

GN 722.2
Spring latches
with flange for surface mounting

→ Page 462

GN 722.3
Spring latches
with flange for surface mounting

→ Page 463

GN 712
Cam action indexing plungers
Plunger protruded

→ Page 464

GN 712.1
Cam action indexing plungers
Plunger retracted

→ Page 465

GN 113.1
Ball lock pins
with axial lock
Stainless Steel

→ Page 469

GN 113.3
Ball lock pins
Stainless Steel
AISI 303

→ Page 470

GN 113.4
Ball lock pins
Stainless Steel
AISI 630

→ Page 470

GN 113.5
Ball lock pins
Stainless Steel
AISI 303

→ Page 471

GN 113.6
Ball lock pins
Stainless Steel
AISI 630

→ Page 471

GN 113.7
Ball lock pins
with T-handle
Stainless Steel
AISI 303

→ Page 472

GN 113.8
Ball lock pins
with T-handle
Stainless Steel
AISI 630

→ Page 472

GN 214.2
Locking pins
with axial lock
Steel

→ Page 473

GN 214.3
Locking pins
with axial lock
Stainless Steel
AISI 303

→ Page 473

GN 114.2
Locking pins
with axial lock
Steel

→ Page 474

Stainless Steel | Ergostyle | Softline | Cleanline | Sanline | ATEX | ESD | Inch

3.1 Indexing plungers, Locking pins, Spring plungers

GN 114.3
Locking pins
with axial lock
Stainless Steel
AISI 303

→ *Page 475*

GN 111.4
Spiral retaining cables
Plastic

→ *Page 479*

GN 615.4
Spring plungers
with bolt, with internal hexagon
Steel

→ *Page 483*

GN 114.6
Locking pins
with axial lock
Stainless Steel
AISI 303

→ *Page 475*

GN 615
Spring plungers
with slot
Steel

→ *Page 480*

GN 615.4
Spring plungers
with bolt, with internal hexagon
Stainless Steel

→ *Page 483*

GN 124
Locking pins
with axial lock
Stainless Steel
AISI 303

→ *Page 476*

GN 615
Spring plungers
with slot
Stainless Steel

→ *Page 480*

GN 615.2
Spring plungers
Plastic

→ *Page 484*

GN 111
Ball chains

→ *Page 477*

GN 615.3
Spring plungers
with internal hexagon
Steel

→ *Page 481*

GN 815
Spring plungers
with collar
Steel

→ *Page 485*

GN 111.5
Ball chains
Stainless Steel

→ *Page 477*

GN 615.3
Spring plungers
with internal hexagon
Stainless Steel

→ *Page 481*

GN 815
Spring plungers
with collar
Stainless Steel

→ *Page 485*

GN 111.3
Key rings
Stainless Steel

→ *Page 477*

GN 615.1
Spring plungers
with bolt, with slot
Steel

→ *Page 482*

GN 616
Spring plungers
with bolt
Steel /
Stainless Steel

→ *Page 486*

GN 111.2
Retaining cables
Stainless Steel

→ *Page 478*

GN 615.1
Spring plungers
with bolt, with slot
Stainless Steel

→ *Page 482*

GN 616.5
Screw drivers
for GN 616

→ *Page 486*

Stainless Steel | Ergostyle | Softline | Cleanline | Sanline | ATEX | ESD | Inch

GN 611
Spring plungers
long version

→ Page 488

GN 614.3
Spring plungers
plain type
Stainless Steel

→ Page 493

GN 716
Side thrust pins

→ Page 499

GN 611.5
Screw drivers
for GN 611

→ Page 488

GN 614.4
Spring plungers
Press on type
Stainless Steel

→ Page 493

GN 715
Side thrust pins
Press on type

→ Page 500

GN 615.7
Spring plungers
with limit switch

→ Page 489

GN 610
Spring loaded shells
Press on type
Steel

→ Page 495

GN 715.1
Mounting tools
for GN 715 / GN 714

→ Page 500

GN 614
Spring plungers
Press on type
Stainless Steel,
Brass

→ Page 490

GN 610
Spring loaded shells
Press on type
Stainless Steel

→ Page 495

GN 714
Side thrust pins
without
pressure pin
Press on type

→ Page 501

GN 614
Spring plungers
Press on type
Plastic

→ Page 490

GN 249
Ball buttons
for spring plungers

→ Page 496

GN 713
Side thrust pins
with thread

→ Page 502

GN 614.1
Side thrust pins
Holder for spring
plungers GN 614

→ Page 491

GN 250
Indent blocks
for spring plungers

→ Page 497

GN 713.1
Mounting tools
for GN 713

→ Page 502

GN 614.2
Spring plungers
double ended,
Press on type

→ Page 492

GN 513
Spring elements

→ Page 498

GN 715.2
Eccentric bushes
for side thrust pins

→ Page 505

Stainless Steel | Ergostyle | Softline | Cleanline | Sanline | ATEX | ESD | Inch

GN 617
GN 617 ... NI
Indexing plungers without rest position
→ Page 416

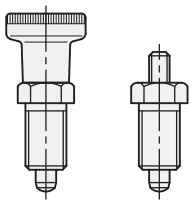

Ø Plunger / Stroke
Ø 5 / 5 ... Ø 10 / 10

Dimensions / Assembly
M 10 x 1 ... M 20 x 1,5

Material / Finish
- Steel version:
  Body blackened,
  Plunger hardened
- Version **NI**:
  Stainless Steel AISI 303
  Plunger
  chemically nickel plated

Other features
Plunger tolerance: -0,02 / -0,04
Bore tolerance GN 617: H7 / GN 617 ... NI: H8

The plastic or Stainless Steel knob is not removable.

The Plunger is very stable, it features the identical diameter over the whole length. So it counters the risk of breakage at the knob.

The type with threaded rod is for applications where a special knob is required or the operation of the indexing plunger is not carried out manually.

With the use of distance bushes GN 609 / GN 609.5 → Page 450 the length of the protruding plunger can be adjusted to the thread length required.

Flat hexagonal nuts GN 909 / GN 909.5 → Page 451

GN 613
GN 613 ... NI
Indexing plungers without rest position
→ Page 418

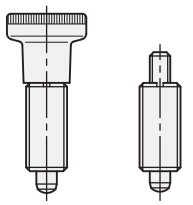

Ø Plunger / Stroke
Ø 5 / 5 ... Ø 10 / 10

Dimensions / Assembly
M 10 x 1 ... M 20 x 1,5

Material / Finish
- Steel version:
  Body blackened,
  Plunger hardened
- Version **NI**:
  Stainless Steel AISI 303
  Plunger
  chemically nickel plated

Other features
Plunger tolerance: -0,02 / -0,04
Bore tolerance GN 613: H7 / GN 613 ... NI: H8

The plastic or Stainless Steel knob is not removable.

The Plunger is very stable, it features the identical diameter over the whole length. So it counters the risk of breakage at the knob.

This version corresponds to GN 617, but without the hexagon collar.

The type with threaded rod is for applications where a special knob is required or the operation of the indexing plunger is not carried out manually.

Flat hexagonal nuts GN 909 / GN 909.5 → Page 451

GN 618
Indexing plungers without rest position
→ Page 419

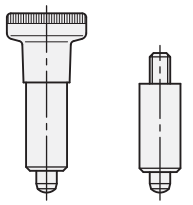

Ø Plunger / Stroke
Ø 5 / 5 ... Ø 8 / 8

Dimensions / Assembly
Ø 12 h9 ... Ø 18 h9

Material / Finish
- Steel
  weldable,
  Body blackened,
  Plunger hardened

Other features
Plunger tolerance: -0,02 / -0,04
Bore tolerance: G7

The plastic knob is not removable.

This version corresponds to GN 613 (with thread). They are required where the installation is done by welding, glueing or clamping.

The type with threaded rod is for applications where a special knob is required or the operation of the indexing plunger is not carried out manually.

GN 617.1
GN 617.1 ... NI
Indexing plungers with rest position
→ Page 420

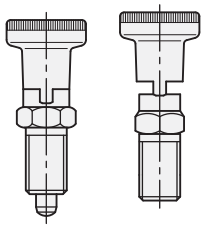

Ø Plunger / Stroke
Ø 5 / 5 ... Ø 10 / 10

Dimensions / Assembly
M10 x 1 ... M 20 x 1,5

Material / Finish
- Steel version:
  Body blackened,
  Plunger hardened
- Version **NI**:
  Stainless Steel AISI 303
  Plunger
  chemically nickel plated

Other features
Plunger tolerance: -0,02 / -0,04
Bore tolerance GN 617.1: H7 / GN 617.1 ... NI: H8

The Plastic or Stainless Steel knob is not removable.

The Plunger is very stable, it features the identical diameter over the whole length. So it counters the risk of breakage at the knob.

The type with rest position is used when the plunger has to stay in its retracted position. To activate this, the knob is retracted and rotated by 90°.

With the use of distance bushes GN 609 / GN 609.5 → Page 450 the length of the protruding plunger can be adjusted to the thread length required.

Flat hexagonal nuts GN 909 / GN 909.5 → Page 451

GN 717 ... ST
GN 717 ... NI
Indexing plungers with and without rest position → Page 421

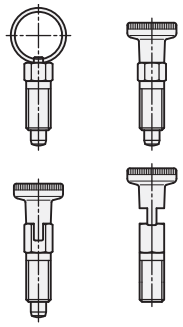

Ø Plunger / Stroke
Ø 3 / 3,5 ... Ø 8 / 8

Dimensions / Assembly
M 6 x ... M 12
M 6 x 0,75 ... M 16 x 1,5

Material / Finish
- Steel version **ST**:
  Body zinc plated,
  Plunger
  Stainless Steel AISI 303
- Version **NI**:
  Body and Plunger
  Stainless Steel AISI 303

Other features
Plunger tolerance: 0 / -0,05
Bore tolerance: +0,03 / +0,08

Indexing plungers GN 717 are known for its small dimensions and reasonably priced. They are available with standard or fine thread.

The type with rest type is used when the plunger has to stay in its retracted position. To activate this, the knob is retracted and rotated by 90°.

With the use of distance bushes GN 609 / GN 609.5 → *Page 450* the length of the protruding plunger can be adjusted to the thread length required.

Flat hexagonal nuts GN 909 / GN 909.5 → Page 451

GN 817
GN 817 ... NI
Indexing plungers with and without rest position → Page 422

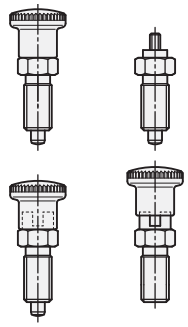

Ø Plunger / Stroke
Ø 4 / 4 ... Ø 12 / 15

Dimensions / Assembly
M 8 x 1 ... M 20 x 1,5

Material / Finish
- Steel version:
  Body blackened,
  Plunger hardened
- Version **NI**:
  Stainless Steel AISI 303,
  Plunger
  chemically nickel plated

Other features
Plunger tolerance: -0,02 / -0,04
Bore tolerance GN 817: H7 / GN 817 ... NI: H8

Indexing plungers GN 817 are a further development based on GN 617 and GN 617.1: • two strokes / plunger-Ø • considerably reduced dimensions for the types with rest position and for plunger-Ø 10 • Locking mechanism integrated in the knob (DBP).

The type with rest position is used when the plunger has to stay in its retracted position. To activate this, the knob is retracted and rotated by 90°.The type with threaded rod is for applications where a special knob is required or the operation of the indexing plunger is not carried out manually.

Flat hexagonal nuts GN 909 / GN 909.5 → Page 451

GN 817.2
GN 817.2 ... NI
Indexing plungers with and without rest position
→ Page 423

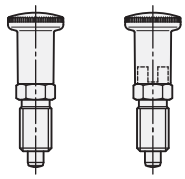

Ø Plunger / Stroke
Ø 4 / 4 ... Ø 12 / 15

Dimensions / Assembly
M 8 x 1 ... M 20 x 1,5

Material / Finish
- Steel version:
  Body blackened,
  Plunger hardened
- Version **NI**:
  Stainless Steel AISI 303,
  Plunger
  chemically nickel plated

Other features
Plunger tolerance: -0,02 / -0,04
Bore tolerance GN 817.2: H7 / GN 817.2 ... NI: H8

Indexing plungers GN 817.2 correspond to GN 817, but they have a longer knob.

GN 817.3
Indexing plungers with and without rest position
→ Page 424

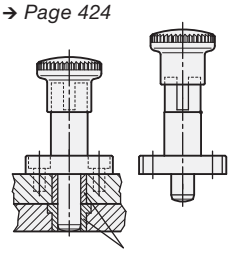

Guide bushes GN 770

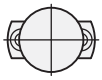

Ø Plunger / Stroke
Ø 8 / 10 and Ø 10 / 12

Dimensions / Assembly
Socket head cap screw M 5

Material / Finish
- Steel
  Body blackened
  Plunger hardened

Other features
Plunger tolerance: h7
Bore tolerance of Positioning bushings: F7

The Plastic knob is not removable.

Indexing plungers GN 817.3 have been designed to achive precision indexing with the help of positioning bushings DIN 179 → *Page 575*.

The type with rest position is used when the plunger has to stay in its retracted position. To activate this, the knob is retracted and rotated by 90°.

Indexing plungers GN 817.3 with rest position have the thrust spring and locking mechanism integrated in the knob. For this reason a perfect operation is always guaranteed.

GN 817.4
GN 817.4 ... NI
Indexing plungers with and without rest position
→ Page 425

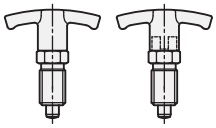

Ø Plunger / Stroke
Ø 4 / 4 ... Ø 12 / 15

Dimensions / Assembly
M 8 x 1 ... M 20 x 1,5

Material / Finish
- Steel version:
  Body blackened,
  Plunger hardened
- Version **NI**:
  Stainless Steel AISI 303,
  Plunger
  chemically nickel plated

Other features
Plunger tolerance: -0,02 / -0,04
Bore tolerance GN 817.4: H7 / GN 817.4 ... NI: H8

Indexing plungers GN 817.4 correspond to GN 817. Instead of the round knob they have a T-handle (plastic).

Flat hexagonal nuts GN 909 / GN 909.5 *→ Page 451*

GN 607 ... ST
GN 607 ... NI
Indexing plungers without rest position
→ Page 426

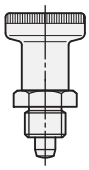

Ø Plunger / Stroke
Ø 6 / 6 and Ø 8 / 8

Dimensions / Assembly
M 12 x 1,5 and M 16 x 1,5

Material / Finish
- Steel version **ST**:
  Body blackened,
  Plunger hardened
- Version **NI**:
  Stainless Steel AISI 303,
  Plunger
  chemically nickel plated

Other features
Plunger tolerance: -0,02 / -0,04
Bore tolerance: H7

The Plastic knob is not removable.

The thrust spring of the indexing plunger GN 607 is integrated with the knob which has led to a reduced overall height.

With the use of distance bushes GN 609 / GN 609.5 → *Page 450* the length of the protruding plunger can be adjusted to the thread length required.

A reasonably priced alternative to indexing plungers GN 607 are mini indexing plungers GN 822.6 / GN 822.7 → *Page 435*.

Flat hexagonal nuts GN 909 / GN 909.5 → Page 451

GN 607.1 ... ST
GN 607.1 ... NI
Indexing plungers with rest position
→ Page 427

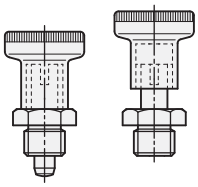

Ø Plunger / Stroke
Ø 6 / 6 and Ø 8 / 8

Dimensions / Assembly
M 12 x 1,5 and M 16 x 1,5

Material / Finish
- Steel version **ST**:
  Body blackened,
  Plunger hardened
- Version **NI**:
  Stainless Steel AISI 303,
  Plunger
  chemically nickel plated

Other features
Plunger tolerance: -0,02 / -0,04
Bore tolerance: H7

The Plastic knob is not removable.

The type with rest position is used when the plunger has to stay in its retracted position. To activate this, the knob is retracted and rotated by 90°.

The thrust spring and locking mechanism of the indexing plunger GN 607.1 are integrated with the knob. For this reason a perfect operation is always guaranteed. This also leads to a reduced overall height.

With the use of distance bushes GN 609 / GN 609.5 → *Page 450* the length of the protruding plunger can be adjusted to the thread length required.

GN 607.2
Indexing plungers without rest position
→ Page 428

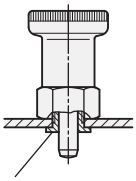

Ø Plunger / Stroke
Ø 6 / 6 and Ø 8 / 7,5

Dimensions / Assembly
Ø 10 and Ø 12
These are the bore-Ø to fit the indexing plungers, they are locked with the hexagon nut.

Material / Finish
- Steel
  Body zinc plated,
  Plunger
  Stainless Steel AISI 303
  chemically nickel plated

Other features
Plunger tolerance: -0,02 / -0,04
Bore tolerance: G7

The Plastic knob is not removable.

Indexing plungers GN 607.2 have been designed for use in thin walled sheet metal parts.

Due to their design, the accuracy of positioning them is lower than with GN 607.

The thrust spring of GN 607.2 is integrated with the knob which has led to a reduced overall height.

Flat hexagonal nuts GN 909 → Page 451

GN 607.3
Indexing plungers
with rest position
→ Page 429

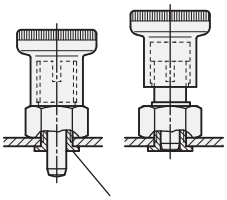

Ø Plunger / Stroke
Ø 6 / 6 and Ø 8 / 7,5

Dimensions / Assembly
Ø 10 and Ø 12
These are the bore-Ø to fit the indexing plungers, they are locked with the hexagon nut.

Material / Finish
- Steel
  Body zinc plated,
  Plunger
  Stainless Steel AISI 303
  chemically nickel plated

Other features
Plunger tolerance: -0,02 / -0,04
Bore tolerance: G7

The Plastic knob is not removable.

Indexing plungers GN 607.3 have been designed for use in thin walled sheet metal parts. Due to their design, the accuracy of positioning them is lower than with GN 607.1.

The type with rest position is used when the plunger has to stay in its retracted position. To activate this, the knob is retracted and rotated by 90°. The thrust spring and locking mechanism of the indexing plunger GN 607.3 are integrated with the knob. For this reason a perfect operation is always guaranteed. This also leads to a reduced overall height.

Flat hexagonal nuts GN 909 → *Page 451*

GN 607.4
Indexing plungers
for welding
without rest position
→ Page 430

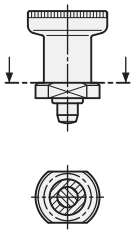

Ø Plunger / Stroke
Ø 6 / 6 and Ø 8 / 8

Dimensions / Assembly
for welding

Material / Finish
- Steel
  weldable
  Body blackened
  Plunger hardened

Other features
Plunger tolerance: -0,02 / -0,04
Bore tolerance: +0,05 / +0,15

The plastic knob is driven on **after** the welding process and not removable.

The thrust spring of the indexing plunger GN 607.4 is integrated with the knob which has led to a reduced overall height.

GN 607.5
Indexing plungers
for welding
with rest position
→ Page 431

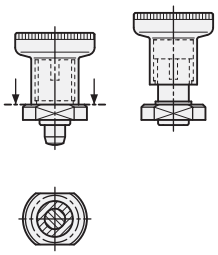

Ø Plunger / Stroke
Ø 6 / 6 and Ø 8 / 8

Dimensions / Assembly
for welding

Material / Finish
- Steel
  weldable
  Body blackened
  Plunger hardened

Other features
Plunger tolerance: -0,02 / -0,04
Bore tolerance: +0,05 / +0,15

The plastic knob is driven on **after** the welding process and not removable.

The type with rest position is used when the plunger has to stay in its retracted position. To activate this, the knob is retracted and rotated by 90°.

The thrust spring and locking mechanism of the indexing plunger GN 607.5 are integrated with the knob. For this reason a perfect operation is always guaranteed. This also leads to a reduced overall height.

GN 608
GN 608.5
Indexing plungers without rest position
→ Page 432

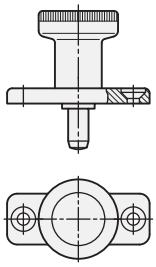

Ø Plunger / Stroke
Ø 6 / 6 and Ø 8 / 8

Dimensions / Assembly
Countersunk screws
M 4 and M 5

Material / Finish
- Body Zinc die casting zinc plated
- GN 608: Plunger Steel hardened
- GN 608.5: Plunger Stainless Steel AISI 303

Other features
Plunger tolerance: -0,02 / -0,04
Bore tolerance: H7

The plastic knob is not removable.

Worth mentioning about these indexing plungers GN 608 is the mounting with two countersunk screws.

The thrust spring of the indexing plunger GN 608 is integrated with the knob which has led to a reduced overall height.

A reasonably priced alternative to indexing plungers GN 608 / GN 608.5 are mini indexing plungers GN 822.6 / GN 822.7 → *Page 435*.

GN 608.1
GN 608.6
Indexing plungers with rest position
→ Page 433

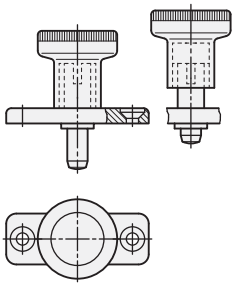

Ø Plunger / Stroke
Ø 6 / 6 and Ø 8 / 8

Dimensions / Assembly
Countersunk screws
M 4 and M 5

Material / Finish
- Body Zinc die casting zinc plated
- GN 608.1: Plunger Steel hardened
- GN 608.6: Plunger Stainless Steel AISI 303

Other features
Plunger tolerance: -0,02 / -0,04
Bore tolerance: H7

The plastic knob is not removable.

Worth mentioning about these indexing plungers GN 608.1 is the mounting with two countersunk screws.

The type with rest position is used when the plunger has to stay in its retracted position. To activate this, the knob is retracted and rotated by 90°. The thrust spring and locking mechanism of the indexing plunger GN 608.1 are integrated with the knob. For this reason a perfect operation is always guaranteed. This also leads to a reduced overall height.

A reasonably priced alternative to GN 608.1 / GN 608.6 are mini indexing plungers GN 822.6 / GN 822.7 → *Page 435*.

GN 822 ... ST
GN 822 ... NI
Mini indexing plungers with and without rest position
Covered indexing mechanism
→ Page 434

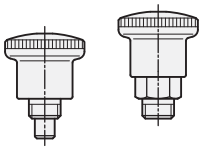

Ø Plunger / Stroke
Ø 4 / 5 ... Ø 7 / 7

Dimensions / Assembly
M 8 x 0,75 ... M 10 x 1

Material / Finish
- Steel version **ST**: Body zinc plated, Plunger Stainless Steel AISI 303
- Version **NI**: Body and Plunger Stainless Steel AISI 303

Other features
Plunger tolerance: -0,06
Bore tolerance: +0,05 / +0,1

The plastic knob is not removable.

Mini indexing plungers GN 822 are known for its small dimensions.

The type with rest position is used when the plunger has to stay in its retracted position. To activate this, the knob is retracted and rotated by 30°.

The overall height of the version with rest position is identical to the height of the version without rest position.

Distance bushes GN 609 / GN 609.5 → Page 450

Flat hexagonal nuts GN 909 / GN 909.5 → Page 451

GN 822.6
GN 822.7
Mini indexing plungers with and without rest position
Covered indexing mechanism
→ Page 435

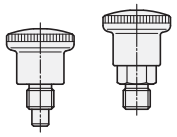

Ø Plunger / Stroke
Ø 4 / 5 ... Ø 10 / 10

Dimensions / Assemby
M 8 x ... M 16
M 8 x 1 ... M 16 x 1,5

Werkstoff / Oberfläche
- GN 822.6:
  Body steel zinc plated,
  Plunger
  Stainless Steel AISI 303
- GN 822.7:
  Body and Plunger
  Stainless Steel
  German Material AISI 303

Other features
Plunger tolerance: h9
Bore tolerance: +0,03 / +0,08

The plastic knob is not removable.

Mini indexing plungers GN 822.6 / GN 822.7 are known for its small dimensions.

The type with rest position is used when the plunger has to stay in its retracted position. To activate this, the knob is retracted and rotated by 30°.

The overall height of the version with rest position is identical to the height of the version without rest position.

Distance bushes GN 609 / GN 609.5 → Page 450

Flat hexagonal nuts GN 909 / GN 909.5 → Page 451

GN 822.8
Mini indexing plungers with and without rest position
Covered indexing mechanism
→ Page 436

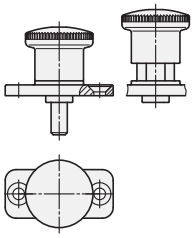

Ø Plunger / Stroke
Ø 4 / 5 und Ø 10 / 10

Dimensions / Assembly
Socket head cap screws
M 4 and M 5

Material / Finish
- Body
  Zinc die casting,
  corrosion-resistant
  via nano®-coating
- Plunger
  Stainless Steel AISI 303

Other features
Plunger tolerance: h9
Bore tolerance : +0,03 / +0,08

The plastic knob is not removable.

Mini indexing plungers GN 822.8 are known for its small dimensions.

The type with rest position is used when the plunger has to stay in its retracted position. To activate this, the knob is retracted and rotated by 30°.

The overall height of the version with rest position is identical to the height of the version without rest position.

GN 822.1 ... ST
GN 822.1 ... NI
Mini indexing plungers with and without rest position, open indexing mechanism
→ Page 437

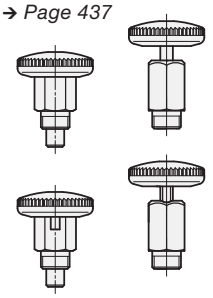

Ø Plunger / Stroke
Ø 4 / 5 ... Ø 7 / 7

Dimensions / Assembly
M8 x 0,75 ... M 10 x 1

Material / Finish
- Steel version **ST**:
  Body zinc plated,
  Plunger
  Stainless Steel AISI 303
- Stainless Steel version **NI**:
  Body and Plunger
  Stainless Steel
  German Material AISI 303

Other features
Plunger tolerance: -0,02 / -0,04
Bore tolerance: +0,05 / +0,1

The plastic knob is not removable.

Mini indexing plungers GN 822.1 are known for its small dimensions.

The type with rest position is used when the plunger has to stay in its retracted position. To activate this, the knob is retracted and rotated by 30°.

The overall height of the version with rest position is identical to the height of the version without rest position.

Distance bushes GN 609 / GN 609.5 → Page 450

Flat hexagonal nuts GN 909 / GN 909.5 → Page 451

GN 417
Indexing plungers with and without rest position → *Page 438*

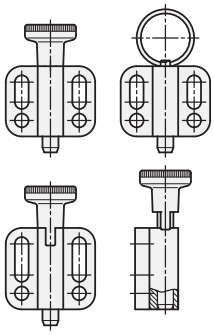

Ø Plunger / Stroke
Ø 4 / 4 ... Ø 8 / 8

Dimensions / Assembly
Socket head cap screws
M 3, M 4, M 5

Material / Finish
- Body
  Zinc die casting, plastic coated black
- Plunger
  Stainless Steel AISI 303

Other features
Plunger tolerance: h9
Bore tolerance : +0,03 / +0,08

The plastic knob is not removable.

The screwing range is chosen in such a way that washers ISO 7092 can be used.

The type with rest position is used when the plunger has to stay in its retracted position. To activate this, the knob is retracted and rotated by 90°.

GN 816
Locking plungers Plunger in standard position protruded → *Page 440*

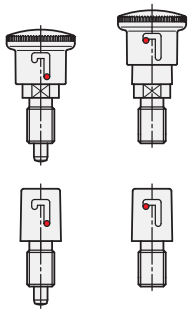

Ø Plunger / Stroke
Ø 6 / 8 and Ø 8 / 10

Dimensions / Assembly
M 12 x 1,5 and M 16 x 1,5

Material / Finish
- Body
  Steel zinc plated,
- Plunger
  Stainless Steel AISI 303

Other features
Plunger tolerance: 0 / -0,05
Bore tolerance: -0,03 / +0,05

The Plastic knob is not removable.

Locking plungers GN 816 feature the following safety functions:

- In indexing position they are secured against accidental operation (rotating).
- In the version with key a special key is required to move the plunger.

With the use of distance bushes GN 609 / GN 609.5 → *Page 450* the length of the protruding plunger can be adjusted to the thread length required.

Flat hexagonal nuts GN 909 → Page 451

GN 816.1
Locking plungers Plunger in standard position retracted → *Page 442*

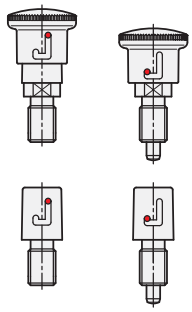

Ø Plunger / Stroke
Ø 6 / 8 and Ø 8 / 10

Dimensions / Assembly
M 12 x 1,5 and M 16 x 1,5

Material / Finish
- Body
  Steel, zinc plated
- Plunger
  Stainless Steel AISI 303

Other features
Plunger tolerance: 0 / -0,05
Bore tolerance: -0,03 / +0,05

The Plastic knob is not removable.

Locking plungers GN 816.1 feature the following safety functions:

- In indexing position they are secured against accidental operation (rotating).
- In the version with key a special key is required to move the plunger.

With the use of distance bushes GN 609 / GN 609.5 → *Page 450* the length of the protruding plunger can be adjusted to the thread length required.

Flat hexagonal nuts GN 909 → Page 451

GN 414
Safety indexing plungers
→ Page 444

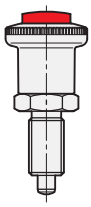

Ø Plunger / Stroke
Ø 6 / 6 ... Ø 10 / 12

Dimensions / Assembly
M 12 x 1,5 and M 16 x 1,5

Material / Finish
- Steel,
  Body blackened,
  Plunger hardened

Other features
Plunger tolerance: -0,02 / -0,04
Bore tolerance: H7

Safety indexing plungers GN 414 are secured against accidental operation of the plunger. It is locked in one or both end positions and can be unlocked only with the red safety push button.

With the use of distance bushes GN 609 → *Page 450* the length of the protruding plunger can be adjusted to the thread length required.

Flat hexagonal nuts GN 909 → Page 451

GN 514
Locking plungers with PUSH - PUSH locking mechanism
→ Page 445

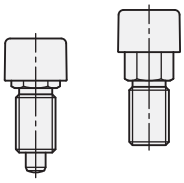

Ø Plunger / Stroke
Ø 6 / 6 and Ø 8 / 8

Dimensions / Assembly
M 12 x 1,5 and M 16 x 1,5

Material / Finish
- Steel
  nitrided,
  blackened

Other features
Plunger tolerance: -0,02 / -0,04
Bore tolerance: H7

The indexing pin in the locking plungers GN 514 is moved via a so-called cardioid mechanism. This mechanism means that the indexing pin is both extended and retracted alone by pressing the operating button

With the use of distance bushes GN 609 → *Page 450* the length of the protruding plunger can be adjusted to the thread length required.

Flat hexagonal nuts GN 909 → Page 451

GN 7336.7
Clamping knobs with indexing plunger
→ Page 446

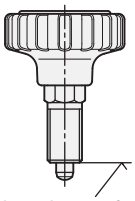

Ø Plunger / Stroke
Ø 5 / 5 ... Ø 8 / 8

Dimensions / Assembly
M 10 x 1 ... M 16 x 1,5

Material / Finish
- Body
  Steel, zinc plated
- Plunger
  Stainless Steel AISI 303

Other features
Plunger tolerance: -0,02 / -0,04
Bore tolerance: G7

Knurled knob Plastic.

Clamping knobs with indexing plunger GN 7336.7 are used for positioning, securing and clamping adjusting elements at the same time.

Flat hexagonal nuts GN 909 → Page 451

GN 7336.8
Clamping indexing plungers
→ Page 447

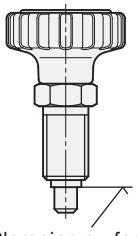

Ø Plunger / Stroke
Ø 6 / 9 and Ø 8 / 9

Dimensions / Assembly
M 16 x 1,5

Material / Finish
- Body
  Steel, zinc plated
- Plunger
  Stainless Steel AISI 303

Other features
Plunger tolerance: -0,02 / -0,04
Bore tolerance: G7

Knurled knob Plastic.

Clamping indexing GN 7336.8 plungers are an advanced development of the GN 7336.7 clamping knobs with indexing plunger. They are used for positioning, securing and clamping adjusting elements at the same time.

This configuration ensures that the indexing pin cannot be pulled from the indexing bore by turning the knurled knob, but only be deliberately pulling the handle (safety function).

With the use of distance bushes GN 609 → *Page 450* the length of the protruding plunger can be adjusted to the thread length required.

Flat hexagonal nuts GN 909 → Page 451

GN 612
GN 612 ... NI
Cam action indexing plungers
→ Page 456

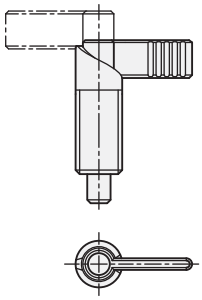

Ø Plunger / Stroke
Ø 4 / 6 ... Ø 12 / 12

Dimensions / Assembly
M 10 ... M 20
M 10 x 1 ... M 20 x 1,5

Material / Finish
- Steel version:
  Body blackened,
  Plunger nitrided
- Version **NI**:
  Stainless Steel
  AISI 303 / AISI 316L
  Plunger
  chemically nickel plated

Other features
Plunger tolerance: -0,02 / -0,04
Bore tolerance: H7

Cam action indexing plungers GN 612 are used in cases where the locking pin must not protrude all the time. By rotating the lock through 180° the locking pin withdraws itself. A notch is provided in either position to prevent the lock from rotating.

GN 612.2
Cam action indexing plungers with flange for surface mounting
→ Page 457

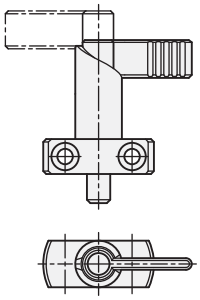

Ø Plunger / Stroke
Ø 6 / 10 ... Ø 12 / 12

Dimensions / Assembly
Socket head cap screws
DIN 912-M 5

Material / Finish
- Steel
  Body blackened,
  Plunger nitrided

Other features
Plunger tolerance: -0,02 / -0,04
Bore tolerance: H7

Cam action indexing plungers GN 612.2 are used in cases where the locking pin must not protrude all the time. By rotating the lock through 180° the locking pin withdraws itself. A notch is provided in either position to prevent the lock from rotating.

GN 612.3
Cam action indexing plungers for welding
→ Page 458

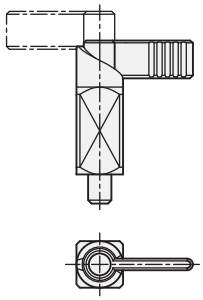

Ø Plunger / Stroke
Ø 6 / 10 ... Ø 12 / 12

Dimensions / Assembly
for welding

Material / Finish
- Steel
  weldable
  Body blackened,
  Plunger nitrided

Other features
Plunger tolerance: -0,02 / -0,04
Bore tolerance: +0,1 / + 0,14

Cam action indexing plungers GN 612.3 are used in cases where the locking pin must not protrude all the time. By rotating the lock through 180° the locking pin withdraws itself. A notch is provided in either position to prevent the lock from rotating.

GN 612.8
Cam action indexing plungers
→ Page 459

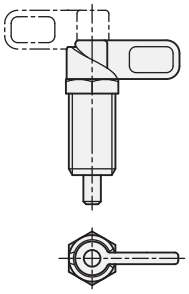

Ø Plunger / Stroke
Ø 6 / 10 ... Ø 12 / 12

Dimensions / Assembly
M 16 x 1,5 / M 20 x 1,5

- Body zinc die casting
  Zinc die casting, corrosion-resistant via nano®-coating
- Plunger
  Steel, zinc plated
- Latch plastic

Other features
Plunger tolerance: -0,05
Bore tolerance: +0,1 / +0,05

Cam action indexing plungers GN 612.8 are used in cases where the locking pin must not protrude all the time. By rotating the lock through 180° the locking pin withdraws itself. A notch is provided in either position to prevent the lock from rotating.

Distance bushes GN 609 → Page 450

Flat hexagonal nuts GN 909 / GN 909.5 → Page 451

GN 612.9
Cam action indexing plungers with flange for surface mounting
→ Page 460

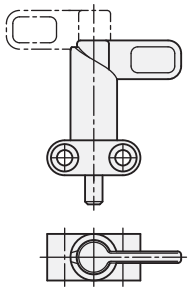

Ø Plunger / Stroke
Ø 6 / 10 ... Ø 12 / 12

Dimensions / Assembly
Socket head cap screws DIN 912-M 5

Material / Finish
- Body zinc die casting
  plastic coated black
- Plunger
  Steel, zinc plated
- Latch plastic

Other features
Plunger tolerance: -0,05
Bore tolerance: +0,1 / + 0,05

Cam action indexing plungers GN 612.9 are used in cases where the locking pin must not protrude all the time. By rotating the lock through 180° the locking pin withdraws itself. A notch is provided in either position to prevent the lock from rotating.

GN 722.1
Spring latches for welding
→ Page 461

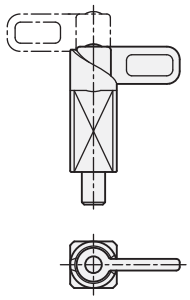

Ø Plunger / Stroke
Ø 8 / 14 ... Ø 14 / 14

Dimensions / Assembly
for welding

Material / Finish
- Body / Latch:
  Precision cast
- Body blackened,
- Latch / Plunger
  zinc plated

Other features
Plunger tolerance: -0,05 / -0,25
Bore tolerance: +0,1 / +0,3

Spring latches GN 722.1 are used when the indexing pin is temporarily not allowed to protrude. The indexing pin retracts by turning the latch by 180°. A lock notch will hold the latch in both positions.

They are designed for use in steel construction or in locksmith shops where less precise positioning / locking is normally required. Therefore functional safety is guaranteed even under dirt exposure.

Flat hexagonal nuts GN 909 / GN 909.5 → Page 451

GN 722.2
Spring latches with flange for surface mounting
→ Page 462

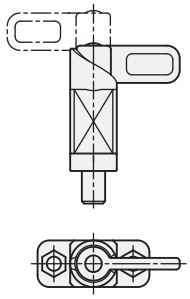

Ø Plunger / Stroke
Ø 8 / 14 ... Ø 14 / 14

Dimensions / Assembly
for surface mounting

Material / Finish
- Body / Latch: Precision cast
- Body zinc plated and black plastic coated
- Latch / Plunger zinc plated

Other features
Plunger tolerance: -0,05 / -0,25
Bore tolerance: +0,1 / +0,3

Spring latches GN 722.2 are used when the indexing pin is temporarily not allowed to protrude. The indexing pin retracts by turning the latch by 180°. A lock notch will hold the latch in both positions.

They are designed for use in steel construction or in locksmith shops where less precise positioning / locking is normally required. Therefore functional safety is guaranteed even under dirt exposure.

GN 722.3
Spring latches with flange for surface mounting
→ Page 463

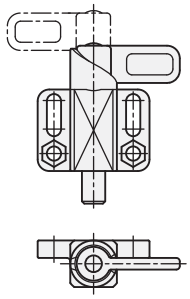

Ø Plunger / Stroke
Ø 8 / 14 ... Ø 14 / 14

Dimensions / Assembly
for surface mounting

Material / Finish
- Body / Latch: Precision cast
- Body zinc plated and black plastic coated
- Latch / Plunger zinc plated

Other features
Plunger tolerance: -0,05 / -0,25
Bore tolerance: +0,1 / +0,3

Spring latches GN 722.3 are used when the indexing pin is temporarily not allowed to protrude. The indexing pin retracts by turning the latch by 180°. A lock notch will hold the latch in both positions.

They are designed for use in steel construction or in locksmith shops where less precise positioning / locking is normally required. Therefore functional safety is guaranteed even under dirt exposure.

GN 712
Cam action indexing plungers, plunger in normal position protruded
→ Page 464

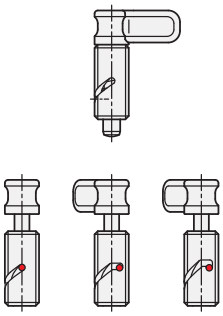

Ø Plunger / Stroke
Ø 6 / 8 ... Ø 10 / 8

Dimensions / Assembly
M 16 x 1,5

Material / Finish
- Steel
  Body zinc plated,
  Plunger nitrided
- Latch plastic

Other features
Plunger tolerance: h9
Bore tolerance: +0,03 / +0,08

Cam action indexing plungers GN 712 are used in such applications where the plunger must not protrude continually. When turning the cam by 90 resp.120 degrees in anti-clockwise direction, the plunger is moved through a curved opening in the body.

There are three different types available:

- the plunger moved back by a spring in its original position
- the plunger held in retracted position
- the plunger resp. is secured against accidental operation

Flat hexagonal nuts GN 909 → Page 451

GN 712.1
Cam action indexing plungers, plunger in normal position retracted
→ Page 465

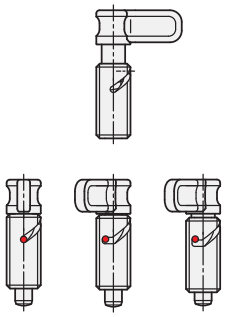

Ø Plunger / Stroke
Ø 6 / 8 ... Ø 8 / 8

Dimensions / Assembly
M 16 x 1,5

Material / Finish
- Steel
  Body zinc plated,
  Plunger nitrided
- Latch plastic

Other features
Plunger tolerance: h9
Bore tolerance: +0,03 / +0,08

Cam action indexing plungers GN 712.1 are used in such applications where the plunger has to protrude only occasionally. When turning the cam by 90 resp.120 degrees in clockwise direction, the plunger is moved through a curved opening in the body.

There are three different types available:

- the plunger moved back by a spring in its original position
- the plunger held in protruded position
- the plunger resp. is secured against accidental operation

Flat hexagonal nuts GN 909 → Page 451

Indexing plungers

without rest position

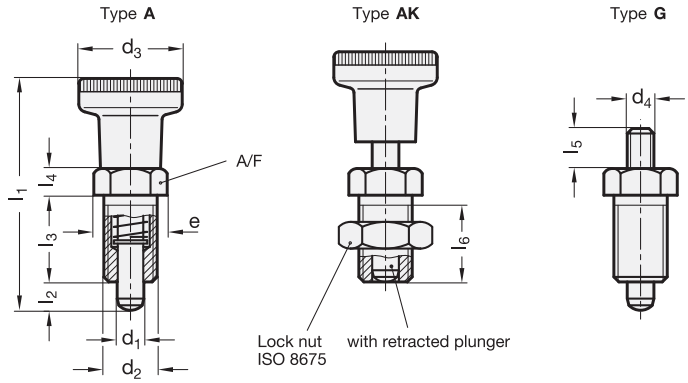

Inox Stainless Steel

Inch sizes available

2	Type
A	with Plastic-Knob, without lock nut
AK	with Plastic-Knob, with lock nut
AN	with Stainless Steel-Knob, without lock nut
AKN	with Stainless Steel-Knob, with lock nut
G	with threaded rod, without lock nut
GK	with threaded rod, with lock nut

1

d_1 Plunger $^{-0,02}_{-0,04}$ Bore H7	d_2	d_3	d_4	e	l_1 ≈	l_2 min.	l_3	l_4	l_5	l_6 min.	A/F	Spring load in N ≈ Steel initial	Steel end	Stainless Steel initial	Stainless Steel end
5	M 10 x 1	21	M 5	13,8	45	5	17	5	6	15	12	7	17	6	15
6	M 12 x 1,5	25	M 6	16,2	54,5	6	20	6	10	17	14	9	24	8	21
8	M 16 x 1,5	31	M 8	21,9	69	8	26	8	12	23	19	11	30	9	26
10	M 20 x 1,5	31	M 8	25,4	80	10	33	10	12	30	22	19	45	17	40

Specification

3

- Steel
  - blackened
  - Plunger hardened
- Stainless Steel AISI 303 **NI**
  Plunger chemically nickel plated
- Knob Type A / AK
  - Plastic (Polyamide PA)
  - black, matt
  - not removable
- Knob Type AN / AKN
  - Stainless Steel AISI 303
  - not removable
- *ISO-Fundamental Tolerances → Page 1132*
- *Stainless Steel characteristics → Page 1144*
- *Plastic characteristics → Page 1141*
- RoHS compliant

Information

Type G or GK of the GN 617 indexing plungers have been designed for applications where the indexing plunger is not operated with the standard knob.

The indexing plungers are designed such that the plunger set in the end position (spring is „on block“) can also absorb axial forces. For applications in which these forces are substantially above the tensile force applied by the operator (Type G), GN 817 indexing plungers are to be preferred.

see also...

- *Range of indexing plungers → Page 402*
- *Mounting blocks GN 412.1 → Page 452*
- *Positioning bushings GN 412.2 → Page 454*

Indexing plungers 1 2 GN 617-6-A		
	1	d_1
	2	Type

Stainless Steel-Indexing plungers 1 2 3 GN 617-8-AKN-NI		
	1	d_1
	2	Type
	3	Material

Indexing plungers GN 617 → *Page 416*
Indexing plungers with rest position GN 617.1 → *Page 420*
Safety indexing plungers GN 414 → *Page 444*
Locking plungers GN 514 → *Page 445*
Indexing plungers GN 717 → *Page 421*
Indexing plungers GN 817 → *Page 422*

Indexing plungers

without rest position

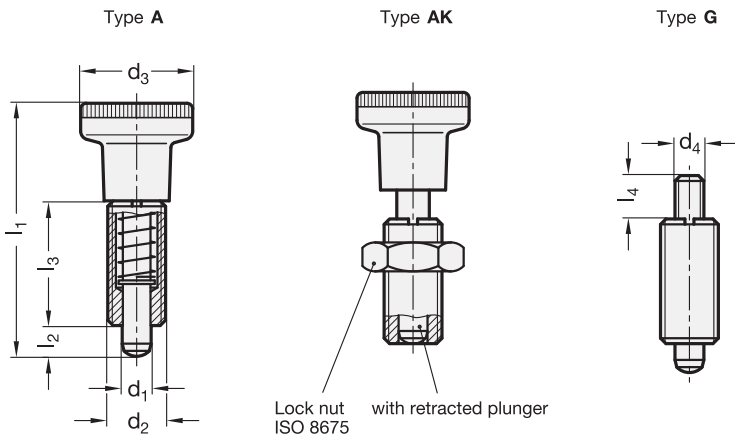

Inox
Stainless
Steel

2 Type

A	with Plastic-Knob, without lock nut
AK	with Plastic-Knob, with lock nut
AN	with Stainless Steel-Knob, without lock nut
AKN	with Stainless Steel-Knob, with lock nut
G	with threaded rod, without lock nut
GK	with threaded rod, with lock nut

1

d_1 Plunger $^{-0,02}_{-0,04}$ Bore H7	d_2	d_3	d_4	l_1 ≈	l_2 min.	l_3	l_4	Spring load in N ≈ Steel initial	Steel end	Stainless Steel initial	Stainless Steel end	Code No. Screw driver
5	M 10 x 1	21	M 5	45	5	22	6	7	17	6	15	GN 613.1-5
6	M 12 x 1,5	25	M 6	54,5	6	26	10	9	24	8	21	GN 613.1-6
8	M 16 x 1,5	31	M 8	69	8	34	12	11	30	9	26	GN 613.1-8
10	M 20 x 1,5	31	M 8	80	10	43	12	19	45	17	40	GN 613.1-10

Specification

3

- Steel
  - blackened
  - Plunger hardened
- Stainless Steel AISI 303 **NI**
  Plunger chemically nickel plated
- Knob Type A / AK
  - Plastic (Polyamide PA)
  - black, matt
  - not removable
- Knob Type AN / AKN
  - Stainless Steel AISI 303
  - not removable
- *ISO-Fundamental Tolerances → Page 1132*
- *Stainless Steel characteristics → Page 1144*
- *Plastic characteristics → Page 1141*
- RoHS compliant

Information

Type G or GK of the GN 613 indexing plungers have been designed for applications where the indexing plunger is not operated with the standard knob. The indexing plungers are designed such that the plunger set in the end position (spring is „on block“) can also absorb axial forces. For applications in which these forces are substantially above the tensile force applied by the operator (Type G), GN 817 indexing plungers are to be preferred.

A special screw driver GN 613.1 is available. Two slots are provided in the upper end of the body which are accessible with the knob in its retracted position.

see also...
- *Range of indexing plungers → Page 402*

Indexing plungers		
1 2	1	d_1
GN 613-8-G	2	Type

Stainless Steel-Indexing plungers		
1 2 3	1	d_1
GN 613-5-AKN-NI	2	Type
	3	Material

Indexing plungers

without thread, without rest position

Type **A**

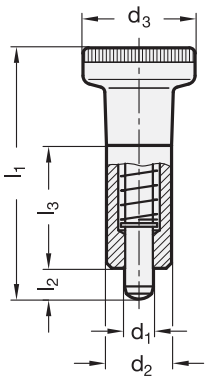

Type **A**

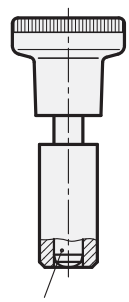

with retracted plunger

Type **G**

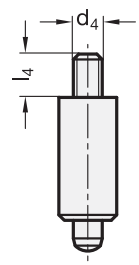

2 Type

A with knob
G with threaded rod

1 d_1 Plunger $^{-0,02}_{-0,04}$ Bore G7	d_2 h9	d_3	d_4	l_1 ≈	l_2 min.	l_3	l_4	Spring load in N ≈ initial	end
5	12	21	M 5	45	5	22	6	7	17
6	14	25	M 6	54,5	6	26	10	9	24
8	18	31	M 8	69	8	34	12	11	30

Specification

- Steel
  - weldable
  - blackened
  - Plunger hardened
- Knob Plastic (Polyamide PA)
  - black, matt
  - not removable
- *ISO-Fundamental Tolerances → Page 1132*
- *Plastic characteristics → Page 1141*
- RoHS compliant

Information

Indexing plungers GN 618 without thread are for applications where welding, resin bonding (Loctite) or clamping is favoured.

Type G has been designed for applications where the indexing plunger is not operated with the standard knob.

The indexing plungers are designed such that the plunger set in the end position (spring is „on block“) can also absorb axial forces. For applications in which these forces are substantially above the tensile force applied by the operator (Type G), additional information can be submitted on request.

see also...

- *Range of indexing plungers → Page 402*
- *Positioning bushings GN 412.2 → Page 454*

How to order		
GN 618-8-A (1 2)	1	d_1
	2	Type

Indexing plungers

with rest position

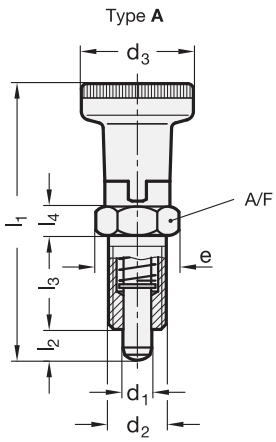

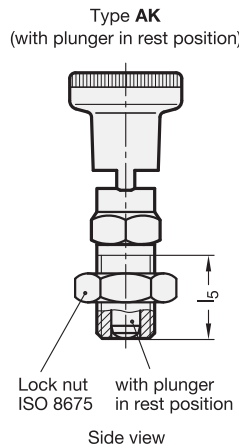

Rost frei — Inox Stainless Steel

Inch — Inch sizes available

2	Type
A	with Plastic-Knob, without lock nut
AK	with Plastic-Knob with lock nut
AN	with Stainless Steel-Knob, without lock nut
AKN	with Stainless Steel-Knob, with lock nut

1

d_1 Plunger $^{-0,02}_{-0,04}$ Bore H7	d_2	d_3	e	l_1 ≈	l_2 min.	l_3	l_4	l_5 min.	A/F	Spring load in N ≈ Steel initial	Steel end	Stainless Steel initial	Stainless Steel end
5	M 10 x 1	21	13,8	51	5	17	5	15	12	7	17	6	15
6	M 12 x 1,5	25	16,2	61	6	20	6	17	14	9	24	8	21
8	M 16 x 1,5	31	21,9	75,5	7	26	8	23	19	11	30	9	26
10	M 20 x 1,5	31	25,4	91	10	33	10	30	22	19	45	17	40

Specification

3

- Steel
  - blackened
  - Plunger hardened
- Stainless Steel AISI 303 **NI**
  Plunger chemically nickel plated
- Knob Type A / AK
  - Plastic (Polyamide PA)
  - black, matt
  - not removable
- Knob Type AN / AKN
  - Stainless Steel AISI 303
  - not removable
- *ISO-Fundamental Tolerances → Page 1132*
- *Stainless Steel characteristics → Page 1144*
- *Plastic characteristics → Page 1141*
- RoHS compliant

Information

Indexing plungers GN 617.1 with rest position are used for such applications where the plunger has to stay in its retracted position. To achieve this, the knob is rotated by 90° degrees after being retracted. A notch keeps the plunger in this position.

see also...

- *Range of indexing plungers → Page 402*
- *Mounting blocks GN 412.1 → Page 452*
- *Positioning bushings GN 412.2 → Page 454*
- *Distance bushings GN 609 / GN 609.5 (to limit the thread length) → Page 450*
- *Flat hexagonal nuts GN 909 / GN 909.5 → Page 451*

Indexing plungers		
1 2	1	d_1
GN 617.1-6-A	2	Type

Stainless Steel-Indexing plungers		
1 2 3	1	d_1
GN 617.1-8-AKN-NI	2	Type
	3	Material

Indexing plungers

with and without rest position

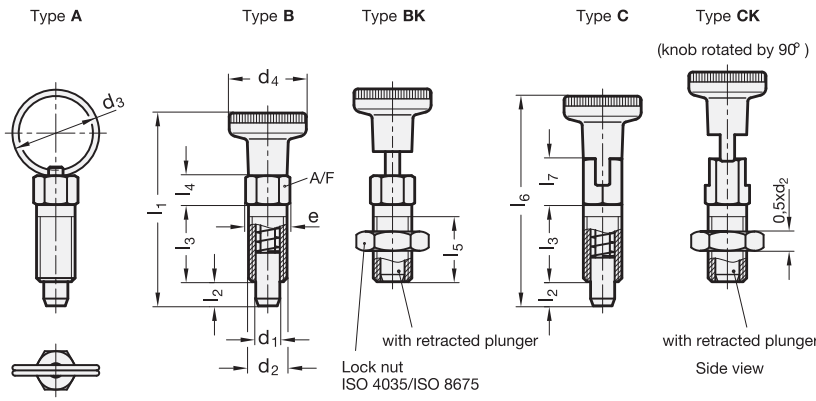

Inox Stainless Steel

Inch sizes available

3 Type

- **A** without rest position (lifting ring) without lock nut
- **AK** without rest position (lifting ring) with lock nut
- **B** without rest position (Knob), without lock nut
- **BK** without rest position (Knob), with lock nut
- **C** with rest position (Knob), without lock nut
- **CK** with rest position (Knob), with lock nut

1 d_1 Plunger h11 Bore $^{+0,03}_{+0,08}$	2 d_2	d_3	d_4	e	l_1	l_2 min.	l_3	l_4	l_5 min.	l_6	l_7	A/F	max. tightening torque in Nm	Spring load in N ≈ initial	end
3	M 6	14	12	6,9	30	3,5	12	4,5	10	32,5	7	6	2	3	12
3	M 6 x 0,75	14	12	6,9	30	3,5	12	4,5	10	32,5	7	6	3	3	12
4	M 6	14	12	6,9	30,5	4	12	4,5	10	33	7	6	2	3	12
4	M 8 x 1	18	16	9,2	39,5	4,5	16	6	13,5	43	9,5	8	8	5	24
5	M 8	18	16	9,2	40	5	16	6	13,5	43,5	9,5	8	7	5	24
5	M 10 x 1	18	18	11,5	42,5	5	16	6	16	46	10	10	22	5	24
6	M 10	24	18	11,5	52	6	20	7,5	17	52	10,5	10	15	5	21
6	M 12 x 1,5	24	21	13,8	52	6	20	7,5	20	55	11	12	38	5	21
8	M 12	30	21	13,8	59	8	24	9	20,5	63,5	13,5	12	20	6	22
8	M 16 x 1,5	30	25	19,6	63,5	8	24	9	24	68	13,5	17	80	6	22

Specification

4

- Threaded body
  - Steel zinc plated, blue passivated **ST**
  - Stainless Steel AISI 303 **NI**
- Plunger
  Stainless Steel AISI 303
- Spring
  Stainless Steel AISI 301
- Lifting ring
  Stainless Steel AISI 301
- Knob Plastic (Polyamide PA)
  - black, matt
  - not removable
- *ISO-Fundamental Tolerances → Page 1132*
- *Stainless Steel characteristics → Page 1144*
- RoHS compliant

Information

Indexing plungers GN 717 are a reasonably priced indexing plunger variant which are distinguished for their small dimensions. Their use should be limited to such applications where high precision indexing is not required.

Due to the comparably small dimensions of indexing plungers GN 717, it is adviseable to follow the values listed above regarding maximum tightening torque during assembly.

- *Range of indexing plungers → Page 402*
- *Distance bushings GN 609 / GN 609.5 (to limit the thread length) → Page 450*

How to order

1 2 3 4
GN 717-8-M12-A-ST

1	d_1
2	d_2
3	Type
4	Material

Indexing plungers

with and without rest position

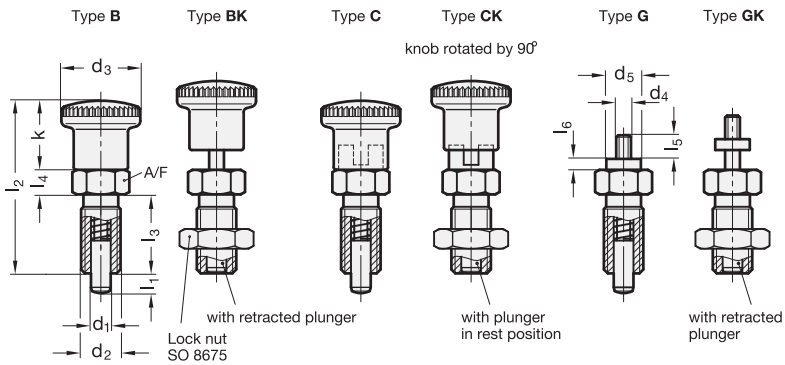

Rost frei — Inox Stainless Steel

Inch — Inch sizes available

3 Type

- **B** without rest position, without lock nut
- **BK** without rest position, with lock nut
- **C** with rest position, without lock nut
- **CK** with rest position, with lock nut
- **G** with threaded rod, without lock nut
- **GK** with threaded rod, with lock nut

1 d_1 Plunger $^{-0,02}_{-0,04}$ Bore H7	2 l_1 min.	d_2	d_3	d_4	d_5	k	l_2	l_3	l_4	l_5	l_6	A/F	Spring load in N ≈ initial	end
4	4	M 8 x 1	16	M 3	7	14	35	16	5	4,5	2,5	10	4,5	12
4	6	M 8 x 1	16	M 3	7	14	35	16	5	4,5	2,5	10	4	12,5
5	5	M 10 x 1	19	M 4	8	16	40	18	6	5,5	3	12	5	15
5	8	M 10 x 1	19	M 4	8	16	40	18	6	5,5	3	12	5	18
6	6	M 12 x 1,5	23	M 5	9	20	48	22	6	7	3,5	14	6,5	19
6	9	M 12 x 1,5	23	M 5	9	20	48	22	6	7	3,5	14	6	25
8	8	M 16 x 1,5	28	M 6	10	24	58	26	8	8,5	4	17	8,5	26
8	12	M 16 x 1,5	28	M 6	10	24	58	26	8	8,5	4	17	8,5	28
10	12	M 16 x 1,5	28	M 6	10	24	58	26	8	8,5	4	17	9,5	38
12	15	M 20 x 1,5	28	M 6	12	24	67	33	10	8,5	4	22	11,5	40

Specification 4

- Steel
  - blackened
  - Plunger hardened
- Stainless Steel AISI 303 **NI**
  Plunger chemically nickel plated
- Knob Plastic (Polyamide PA)
  - black, matt
  - red **RT** RAL 3000
    add RT on order code
  - not removable
- *ISO-Fundamental Tolerances → Page 1132*
- *Stainless Steel characteristics → Page 1144*
- *Plastic characteristics → Page 1141*
- RoHS compliant

Information

Indexing plungers GN 817 with rest position (Type C / CK) are used for such applications where the plunger has to stay in its retracted position. To achieve this, the knob is rotated by 90° degrees after being retracted. A notch keeps the plunger in this position.

see also...
- *Range of indexing plungers → Page 402*

Indexing plungers		
1 2 3	1	d_1
GN 817-4-6-C	2	l_1
	3	Type

Stainless Steel-Indexing plungers		
1 2 3 4	1	d_1
GN 817-6-9-B-NI	2	l_1
	3	Type
	4	Material

Indexing plungers

with long knob, with and without rest position

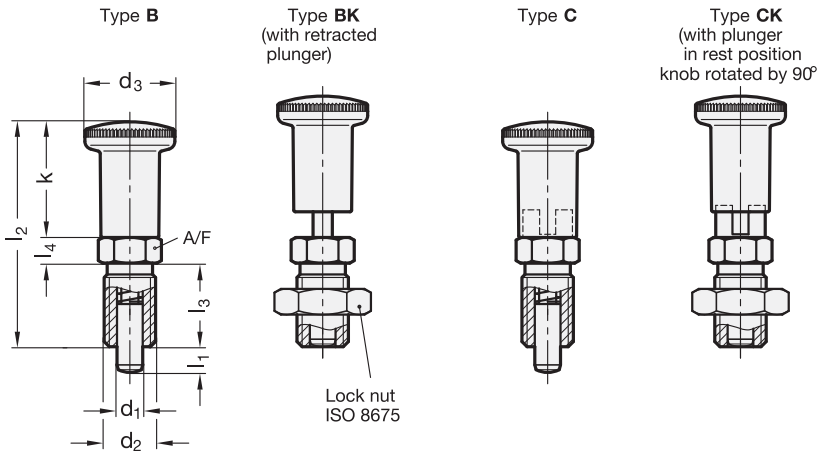

Inox
Stainless
Steel

3 Type

- **B** without rest position, without lock nut
- **BK** without rest position, with lock nut
- **C** with rest position, without lock nut
- **CK** with rest position, with lock nut

1 d_1 Plunger $^{-0,02}_{-0,04}$ Bore H7	2 l_1 min.	d_2	d_3	k	l_2	l_3	l_4	A/F	Spring load in N ≈ initial	end
4	4	M 8 x 1	16	21	42	16	5	10	4,5	12
4	6	M 8 x 1	16	21	42	16	5	10	4	12,5
5	5	M 10 x 1	19	24	48	18	6	12	5	15
5	8	M 10 x 1	19	24	48	18	6	12	5	18
6	6	M 12 x 1,5	23	30	58	22	6	14	6,5	19
6	9	M 12 x 1,5	23	30	58	22	6	14	6	25
8	8	M 16 x 1,5	28	36	70	26	8	17	8,5	26
8	12	M 16 x 1,5	28	36	70	26	8	17	8,5	28
10	12	M 16 x 1,5	28	36	70	26	8	17	9,5	38
12	15	M 20 x 1,5	28	36	79	33	10	22	11,5	40

Specification

4

- Steel
  - blackened
  - Plunger hardened
- Stainless Steel AISI 303 **NI**
  Plunger chemically nickel plated
- Knob Plastic (Polyamide PA)
  - black, matt
  - not removable
- *ISO-Fundamental Tolerances → Page 1132*
- *Stainless Steel characteristics → Page 1144*
- *Plastic characteristics → Page 1141*
- RoHS compliant

Information

Indexing plungers GN 817.2 correspond to GN 817, they only differ by a longer knob.

Type C / CK are used for such applications where the plunger has to stay in its retracted position. To achieve this, the knob is rotated by 90° degrees after being retracted. A notch keeps the plunger in this position.

see also...
- *Range of indexing plungers → Page 402*

Steel-Indexing plungers		
1 2 3	1	d_1
GN 817.2-4-6-C	2	l_1
	3	Type

Stainless Steel-Indexing plungers		
1 2 3 4	1	d_1
GN 817.2-6-9-B-NI	2	l_1
	3	Type
	4	Material

Indexing plungers

for precision locating

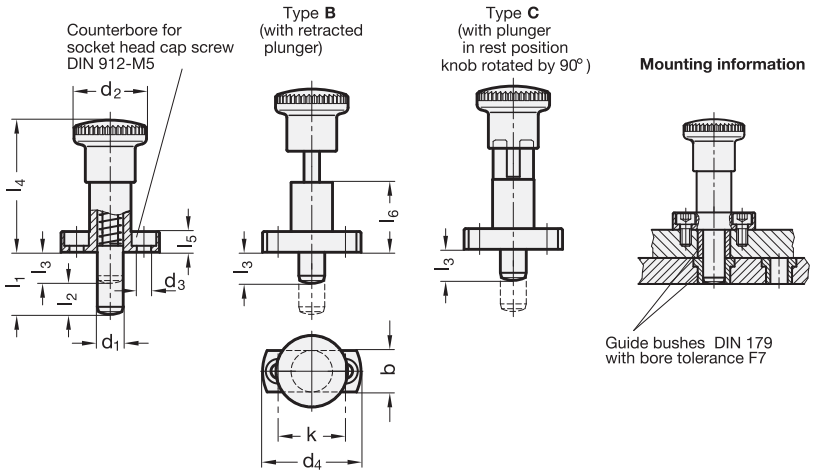

3 Type

B without rest position
C with rest position

1 d_1 Plunger h7	2 l_1	l_2 Stroke	l_3	b	d_2	d_3	d_4	k	l_4	l_5	l_6	Spring load in N ≈ initial	end
8	20	10	10	16	28	5,5	38	26	51	8	27	8,5	28
8	22	10	12	16	28	5,5	38	26	51	8	27	8,5	28
8	26	10	16	16	28	5,5	38	26	51	8	27	8,5	28
8	30	10	20	16	28	5,5	38	26	51	8	27	8,5	28
10	22	12	10	16	28	5,5	38	26	51	8	27	9,5	38
10	24	12	12	16	28	5,5	38	26	51	8	27	9,5	38
10	28	12	16	16	28	5,5	38	26	51	8	27	9,5	38
10	32	12	20	16	28	5,5	38	26	51	8	27	9,5	38

Specification

- Steel
  - blackened
  - Plunger hardened and ground
- Knob Plastic (Polyamide PA)
  - black, matt
  - not removable
- *ISO-Fundamental Tolerances → Page 1132*
- *Plastic characteristics → Page 1141*
- RoHS compliant

Accessory

- Guide bushes DIN 179 → *Page 575*

Information

Indexing plungers GN 817.3 realize a reasonable priced precision locating when guide bushes DIN 179 are used.

For this purpose a guide bush DIN 179 is used as guide, whereby the dimension l_3 of the plunger determines the length of the bush.

The precise location is, therefore, not dependent on the guide pin in the plunger, but on the accuracy of the guide bush (bore tolerance F7) and the plunger (tolerance h7). Both components are hardened and ground. It goes without saying that the bush length also influences the accuracy of the positioning.

Type C is used for such applications where the plunger has to stay in its retracted position. To achieve this, the knob is rotated by 90° degrees after being retracted. A notch keeps the plunger in this position.

see also...

- *Range of indexing plungers → Page 402*

How to order		
GN 817.3-10-24-C (1 2 3)	1	d_1
	2	l_1
	3	Type

Indexing plungers

with T-Handle, with and without rest position

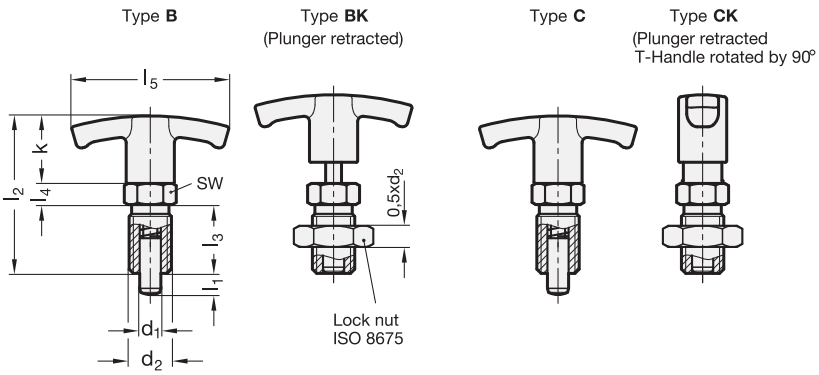

Inox
Stainless
Steel

3 Type

- **B** without rest position, without lock nut
- **BK** without rest position, with lock nut
- **C** with rest position, without lock nut
- **CK** with rest position, with lock nut

1 d_1 Plunger $^{-0,02}_{-0,04}$ Bore H7	2 l_1 min.	d_2	k	l_2	l_3	l_4	l_5	A/F	Spring load in N ≈ initial	end
6	6	M 12 x 1,5	20	48	22	6	54	14	6,5	19
6	9	M 12 x 1,5	20	48	22	6	54	14	6	25
8	8	M 16 x 1,5	25	59	26	8	59	17	8,5	26
8	12	M 16 x 1,5	25	59	26	8	59	17	8,5	28
10	12	M 16 x 1,5	25	59	26	8	59	17	9,5	38
12	15	M 20 x 1,5	25	68	33	10	59	22	11,5	40

Specification

4

- Steel —
  - blackened
  - Plunger hardened
- Stainless Steel **NI**
  - AISI 303
  - Plunger chemically nickel plated
- T-Handle
  Plastic (Polyamide PA)
  - not removable
  - black, matt
- *ISO-Fundamental tolerances → Page 1132*
- *Stainless Steel characteristics → Page 1144*
- *Plastic characteristics → Page 1141*
- RoHS compliant

Information

Indexing plungers GN 817.4 are similar to GN 817, but with a T-handle instead of a round head.

This shape allows better visual orientation of the indexing position of Type C and is advantageous when greater unlocking forces occur.

Type C with rest position is used in such applications where the plunger must not protrude continually. In that case the knob is retracted and afterwards turned by 90°. A notch keeps the plunger in this position.

see also...
- *Guide bushes DIN 172 / DIN 179 → Page 575*

Indexing plunger
1 2 3
GN 817.4-8-12-CK

1	d_1
2	l_1
3	Type

Stainless Steel-Indexing plunger
1 2 3 4
GN 817.4-12-15-B-NI

1	d_1
2	l_1
3	Type
4	Material

Indexing plungers

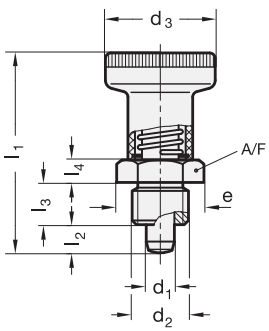

Plunger retracted

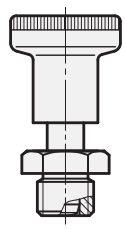

Asssembly examples

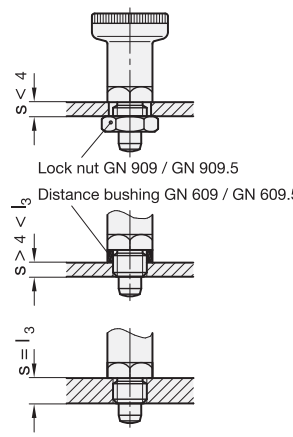

EDELSTAHL Rost frei — Inox Stainless Steel

2 Type

A without lock nut
AK with lock nut

1

d_1 Plunger $^{-0,02}_{-0,04}$ Bore H7	d_2	d_3	e ≈	l_1	l_2 ±0,5	l_3 −0,15	l_4	A/F	Spring load in N ≈ Steel initial	Steel end	Stainless Steel initial	Stainless Steel end	Axial load in N
6	M 12 x 1,5	25	19,6	45	6	10	5	17	7	8,5	18	22	400
8	M 16 x 1,5	31	21,9	54	8	12	6	19	14	15,5	24	28	500

Specification

3

- Steel **ST**
  - blackened
  - Plunger hardened
- Stainless Steel AISI 303 **NI**
  Plunger chemically nickel plated
- Knob
  Plastic (Polyamide PA)
  - black, matt
  - not removable
- *ISO-Fundamental Tolerances → Page 1132*
- *Stainless Steel characteristics → Page 1144*
- *Plastic characteristics → Page 1141*
- RoHS compliant

Information

Indexing plungers GN 607 are distinguished for their small dimension. The extremely low lock nuts GN 909 / GN 909.5 enlarge the mounting options.

see also...

- *Range of indexing plungers → Page 402*
- *Distance bushings GN 609 (to limit the thread length) → Page 450*
- *Stainless Steel-Distance bushings GN 609.5 (to limit the thread length) → Page 450*
- *Positioning bushings GN 412.2 → Page 454*
- *Flat hexagonal nuts GN 909 → Page 451*
- *Flat Stainless Steel-Hexagonal nuts GN 909.5 → Page 451*

Indexing plungers		
1 2 3	1	d_1
GN 607-8-AK-ST	2	Type
	3	Material

Stainless Steel-Indexing plungers		
1 2 3	1	d_1
GN 607-6-AK-NI	2	Type
	3	Material

Indexing plungers

with rest position

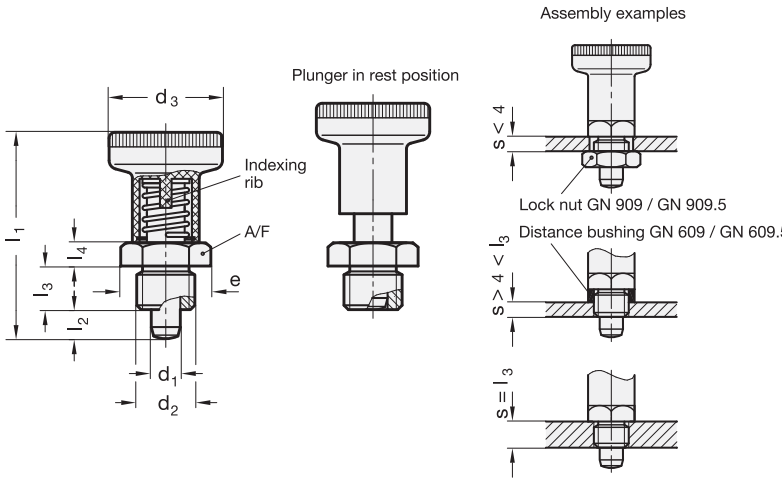

Inox Stainless Steel

2 Type

A without lock nut
AK with lock nut

1

d_1 Plunger $^{-0,02}_{-0,04}$ Bore H7	d_2	d_3	e ≈	l_1	l_2 ±0,5	l_3 −0,15	l_4	A/F	Spring load in N ≈ Steel initial	Steel end	Stainless Steel initial	Stainless Steel end	Axial load in N
6	M 12 x 1,5	25	19,6	45	6	10	5	17	7	8,5	18	22	400
8	M 16 x 1,5	31	21,9	54	8	12	6	19	14	15,5	24	28	500

Specification

3

- Steel **ST**
  - blackened
  - Plunger hardened
- Stainless Steel AISI 303 **NI**
  Plunger chemically nickel plated
- Knob
  Plastic (Polyamide PA)
  - black, matt
  - not removable
- *ISO-Fundamental Tolerances → Page 1132*
- *Stainless Steel characteristics → Page 1144*
- *Plastic characteristics → Page 1141*
- RoHS compliant

Information

Indexing plungers GN 607.1 with rest position are used for such applications where the plunger has to stay in its retracted position. To achieve this, the knob is rotated by 90° degrees after being retracted. A notch keeps the plunger in this position.

Indexing plungers GN 607.1 are distinguished for their small dimensions. The extremely low lock nuts GN 909 / GN 909.5 enlarge the mounting options. The locking tab is an integral part of the knob thus giving reliable operation at all times.

see also...
- *Range of indexing plungers → Page 402*
- *Distance bushings GN 609 (to limit the thread length) → Page 450*
- *Stainless Steel-Distance bushings GN 609.5 (to limit the thread length) → Page 450*
- *Positioning bushings GN 412.2 → Page 454*
- *Flat hexagonal nuts GN 909 → Page 451*
- *Flat Stainless Steel-Hexagonal nuts GN 909.5 → Page 451*

Indexing plungers		
1 2 3	1	d_1
GN 607.1-6-A-ST	2	Type
	3	Material

Stainless Steel-Indexing plungers		
1 2 3	1	d_1
GN 607.1-8-A-NI	2	Type
	3	Material

Indexing plungers

for installation in thin walled equipment, without rest position

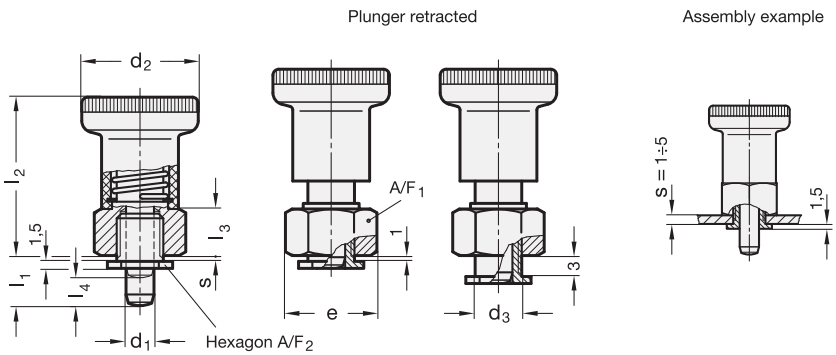

1 d_1 Plunger Bore G7 $^{-0,02}_{-0,04}$	2 l_1		d_2	d_3	e	l_2	l_3	l_4 Stroke	s Clamping distance	A/F_1	A/F_2	Spring load in N ≈ initial	end	Axial load in N
6	8,5	10,5	25	10	19,5	34	10	6	1 bis 5	17	14	7	18	400
8	10	12	31	12	22	40	12	7,5	1 bis 5	19	16	14	24	500

Specification

3

- Guide Steel **ST**
  zinc plated, blue passivated
- Plunger Stainless Steel AISI 303
  chemically nickel plated
- Knob Plastic (Polyamide PA)
  - black, matt
  - not removable
- *ISO-Fundamental Tolerances → Page 1132*
- *Stainless Steel characteristics → Page 1144*
- *Plastic characteristics → Page 1141*
- RoHS compliant

Accessory

- Double ring spanner
  GN 607.9-SW14-SW16
  (assembling aid)

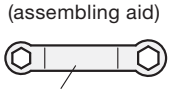

1mm thick

Information

Indexing plungers GN 607.2 have been developed for installation in thin walled equipment.

It has to be taken into consideration that, depending on the mounting plate thickness ‚s‘, the protruding plunger length ‚l1‘ and the position of the hexagon nut on its centre bush, the plunger nose might not always be fully retractable.

For design reasons the positional accuracy of this indexing plunger is not as precise as plunger GN 607.

see also...

- *Range of indexing plungers → Page 402*
- *Positioning bushings GN 412.2 → Page 454*

How to order		
GN 607.2-6-10,5-ST (1 2 3)	1	d_1
	2	l_1
	3	Material

Indexing plungers

for installation in thin walled equipment, with rest position

Plunger in rest position

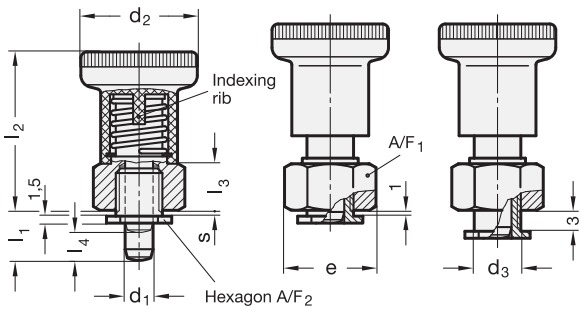

Assembly example

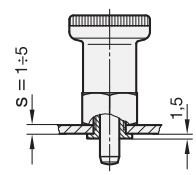

1 d_1 Plunger Bore G7 $^{-0,02}_{-0,04}$	2 l_1		d_2	d_3	e	l_2	l_3	l_4 Stroke	s Clamping distance	A/F_1	A/F_2	Spring load in N ≈ initial	end	Axial load in N
6	8,5	10,5	25	10	19,5	34	10	6	1 bis 5	17	14	7	18	400
8	10	12	31	12	22	40	12	7,5	1 bis 5	19	16	14	24	500

Specification

3

- Guide Steel **ST**
  zinc plated, blue passivated
- Plunger Stainless Steel AISI 303
  chemically nickel plated
- Knob Plastic (Polyamide PA)
  - black, matt
  - not removable
- *ISO-Fundamental Tolerances → Page 1132*
- *Stainless Steel characteristics → Page 1144*
- *Plastic characteristics → Page 1141*
- RoHS compliant

Accessory

- Double ring spanner
  GN 607.9-SW14-SW16
  (assembling aid)

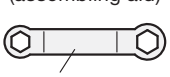

1mm thick

Information

Indexing plungers GN 607.3 have been developed for installation in thin walled equipment.

It has to be taken into consideration that, depending on the mounting plate thickness ‚s‘, the protruding plunger length ‚l1‘ and the position of the hexagon nut on its centre bush, the plunger nose might not always be fully retractable.

For design reasons the positional accuracy of this indexing plunger is not as precise as plunger GN 607.

Indexing plungers with rest position are used for such applications where the plunger has to stay in its retracted position. To achieve this, the knob is rotated by 90° degrees after being retracted. A notch keeps the plunger in this position.

see also...

- *Range of indexing plungers → Page 402*
- *Positioning bushings GN 412.2 → Page 454*

Indexing plungers		
1 2 3	1	d_1
GN 607.3-8-10-ST	2	l_1
	3	Material

Indexing plungers

for welding, without rest position

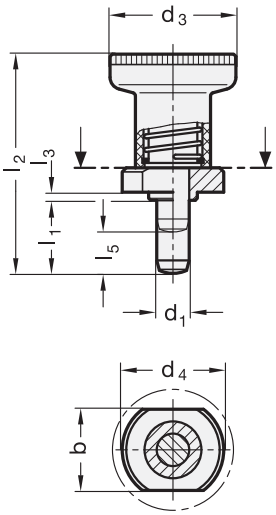

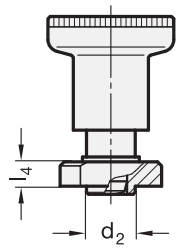

Plunger retracted

(if $l_1 = d_1$)

Assembly instruction

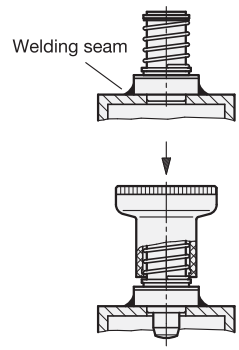

To prevent damage of the plastic knob, it will be driven onto the shaft using a plastic mallet, after the welding process.

1 d_1 Plunger $^{-0,02}_{-0,04}$ Bore $^{+0,30}_{+0,25}$	2 l_1	b	d_2 $^{-0,02}_{-0,1}$	d_3	d_4	l_2	l_3	l_4	l_5 Stroke	Spring load in N ≈ initial	end	Axial load in N ≈
6	6	18	10	25	22	37	1,5	5,5	6	8,5	22	400
6	14	18	10	25	22	45	1,5	5,5	6	8,5	22	400
8	8	20	12	31	25	44	2	6,5	8	15,5	28	500
8	18	20	12	31	25	54	2	6,5	8	15,5	28	500

Specification

3

- Steel **ST**
  - blackened
  - Plunger hardened
- Knob Plastic (Polyamide PA)
  - black, matt
  - not removable
- *Plastic characteristics → Page 1141*
- RoHS compliant

Information

Indexing plungers GN 607.4 are designed for welded fixing, in particular for use in steel square tubings.

The lug d_2 is intended for positioning.

The plastic knob with the in-moulded indexing pin is driven on after the welding process.

see also...

- *Range of indexing plungers → Page 402*
- *Positioning bushings GN 412.2 → Page 454*

How to order		
GN 607.4-6-14-ST (1 2 3)	1	d_1
	2	l_1
	3	Material

Indexing plungers

for welding, with rest position

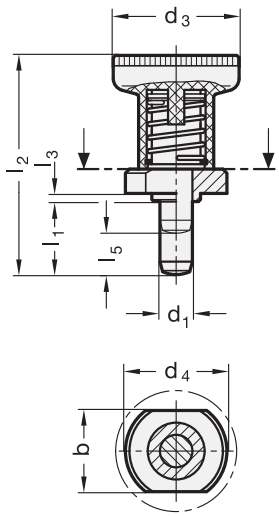

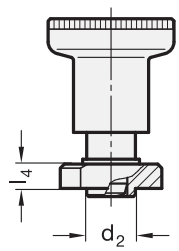

Plunger retracted

(if $l_1 = d_1$)

Assembly instruction

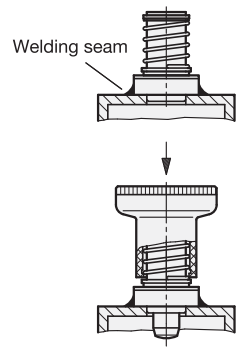

To prevent damage of the plastic knob, it will be driven onto the shaft using a plastic mallet, after the welding process.

1 d_1 Plunger $^{-0,02}_{-0,04}$ Bore $^{+0,30}_{+0,25}$	2 l_1	b	d_2 $^{-0,02}_{-0,1}$	d_3	d_4	l_2	l_3	l_4	l_5 Stroke	Spring load in N ≈ initial	end	Axial load in N ≈
6	6	18	10	25	22	37	1,5	5,5	6	8,5	22	400
6	14	18	10	25	22	45	1,5	5,5	6	8,5	22	400
8	8	20	12	31	25	44	2	6,5	8	15,5	28	500
8	18	20	12	31	25	54	2	6,5	8	15,5	28	500

Specification

3

- Steel **ST**
  - blackened
  - Plunger hardened
- Knob Plastic (Polyamide PA)
  - black, matt
  - not removable
- *Plastic characteristics → Page 1141*
- RoHS compliant

Information

Indexing plungers GN 607.5 with rest position are used in cases where the indexing pin is temporarily not allowed to protrude. After pulling out, the knob is turned by 90°.

A notch keeps the plunger in this position.

The GN 607.5 indexing plungers are intended for welded fixing, in particular for use in steel square tubings.

The lug d_2 is intended for positioning.

The plastic knob with the in-moulded indexing pin is driven on after the welding process.

see also...
- *Range of indexing plungers → Page 402*
- *Mounting blocks GN 412.1 → Page 452*

How to order		
1 2 3	1	d_1
GN 607.5-6-6-ST	2	l_1
	3	Material

Indexing plungers

without rest position

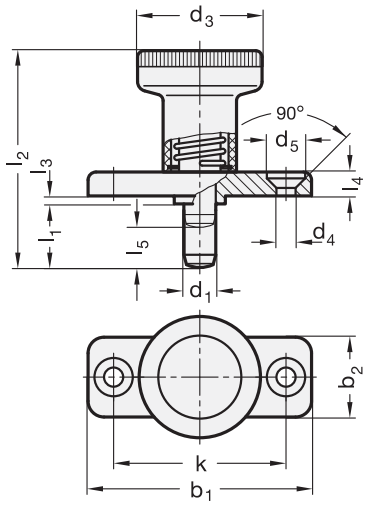

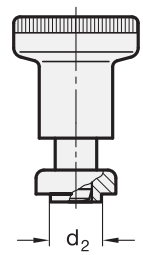

Plunger retracted

(if $l_1 = d_1$)

Inox Stainless Steel

1 d_1 Plunger $^{-0,02}_{-0,04}$ Bore H7	2 l_1	b_1	b_2	d_2 $^{-0,02}_{-0,1}$	d_3	d_4	d_5	k	l_2	l_3 −0,15	l_4	l_5 Stroke	Spring load in N ≈ initial	end	Axial load in N
6	6	40	18	10	25	4,3	8,3	30	37	2,5	4,5	6	8,5	22	400
6	14	40	18	10	25	4,3	8,3	30	45	2,5	4,5	6	8,5	22	400
8	8	46	20	12	31	5,3	10,4	34	44	2,5	5,5	8	15,5	28	500
8	18	46	20	12	31	5,3	10,4	34	54	2,5	5,5	8	15,5	28	500

Specification

- Guide
  Zinc die casting
  zinc plated, blue passivated
- Knob
  Plastic (Polyamide PA)
  - black, matt
  - not removable
- **GN 608**
  - Plunger Steel, hardened
  - Single components Steel / Brass
- **GN 608.5**
  - Plunger Stainless Steel AISI 303 chemically nickel plated
  - Single components Stainless Steel
- *ISO-Fundamental Tolerances → Page 1132*
- *Stainless Steel characteristics → Page 1144*
- *Plastic characteristics → Page 1141*
- RoHS compliant

Information

Indexing plungers GN 608 / GN 608.5 are distinguished for their small dimensions.

see also...
- *Range of indexing plungers → Page 402*
- *Positioning bushings GN 412.2 → Page 454*

Plunger Steel		
GN 608-8-18 (1 2)	1	d_1
	2	l_1

Plunger Stainless Steel		
GN 608.5-6-14 (1 2)	1	d_1
	2	l_1

Indexing plungers

with rest position

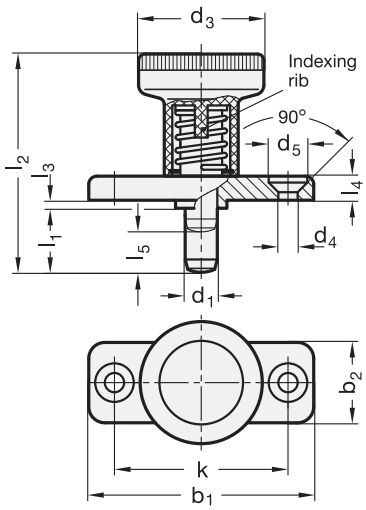

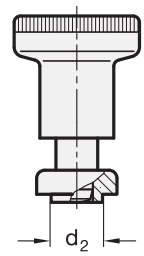

with plunger in rest position

(if $l_1 = d_1$)

Rost frei — Inox Stainless Steel

1 d_1 Plunger $^{-0,02}_{-0,04}$ Bore H7	2 l_1	b_1	b_2	d_2 $^{-0,02}_{-0,1}$	d_3	d_4	d_5	k	l_2	l_3 −0,15	l_4	l_5 Stroke	Spring load in N ≈ initial	end	Axial load in N
6	6	40	18	10	25	4,3	8,3	30	37	2,5	4,5	6	8,5	22	400
6	14	40	18	10	25	4,3	8,3	30	45	2,5	4,5	6	8,5	22	400
8	8	46	20	12	31	5,3	10,4	34	44	2,5	5,5	8	15,5	28	500
8	18	46	20	12	31	5,3	10,4	34	54	2,5	5,5	8	15,5	28	500

Specification

- Guide
  Zinc die casting
  zinc plated, blue passivated
- Knob
  Plastic (Polyamide PA)
  - black, matt
  - not removable
- **GN 608.1**
  - Plunger Steel, hardened
  - Single components Steel / Brass
- **GN 608.6**
  - Plunger Stainless Steel AISI 303 chemically nickel plated
  - Single components Stainless Steel
- *ISO-Fundamental Tolerances → Page 1132*
- *Stainless Steel characteristics → Page 1144*
- *Plastic characteristics → Page 1141*
- RoHS compliant

Information

Indexing plungers GN 608.1 / GN 608.6 with rest position are used for such applications where the plunger has to stay in its retracted position. To achieve this, the knob is rotated by 90° degrees after being retracted. A notch keeps the plunger in this position.

Indexing plungers GN 608.1 / GN 608.6 are distinguished for their small dimensions. The locking tab is integrated into the knob thus giving reliable operation at all times.

see also...
- *Range of indexing plungers → Page 402*
- *Positioning bushings GN 412.2 → Page 454*

Plunger Steel		
GN 608.1-8-8 (1 2)	1	d_1
	2	l_1

Plunger Stainless Steel		
GN 608.6-6-14 (1 2)	1	d_1
	2	l_1

Mini indexing plungers

Covered indexing mechanism, with and without rest position

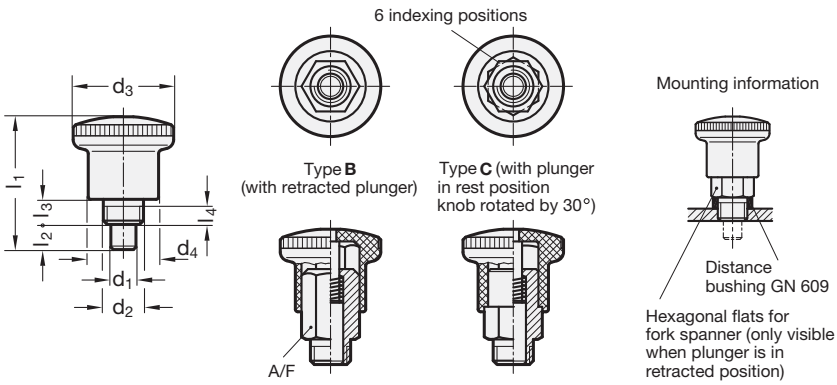

Inox
Stainless
Steel

2 Type

B without rest position
C with rest position

1

d_1 Plunger Bore $^{0}_{-0,06}$ $^{+0,05}_{+0,1}$	d_2	d_3	d_4	l_1	l_2 min.	l_3	l_4 min.	A/F	Spring load in N ≈ initial	end
4	M 8 x 0,75	21	15	26,5	5	5	3,5	10	4,5	12
5	M 8 x 0,75	21	15	26,5	5	5	3,5	10	4,5	12
6	M 10 x 1	25	18	34	7	7	4,5	12	5	18
7	M 10 x 1	25	18	34	7	7	4,5	12	5	18

Specification

3

- Steel **ST**
  zinc plated, blue passivated
- Stainless Steel AISI 303 **NI**
- Plunger
  Stainless Steel AISI 303
- Spring
  Stainless Steel AISI 301
- Knob Plastic (Polyamide PA)
  - black, matt
  - not removable
- *Stainless Steel characteristics → Page 1144*
- *Plastic characteristics → Page 1141*
- RoHS compliant

Accessory

- Distance bushings GN 609 / GN 609.5 are to be ordered separately.

Information

Mini indexing plungers GN 822 are distinguished for their small dimensions. They have been designed for installation in thin walled sheet metal constructions.

They are inserted into position by holding them by the serrated knob. The spanner flats on the lock nut are revealed when retracting the pin, so that the mini indexing plunger can be easily tightened by means of a fork spanner.

With Type C the knob can be turned by 30° and a notch keeps the knob in this position.

see also...

- *Range of indexing plungers → Page 402*
- *Distance bushings GN 609 / GN 609.5 → Page 450*
- *Flat hexagonal nuts GN 909 / GN 909.5 → Page 451*

Steel-Mini indexing plungers		
1 2 3	1	d_1
GN 822-6-C-ST	2	Type
	3	Material

Stainless Steel-Mini indexing plungers		
1 2 3	1	d_1
GN 822-4-B-NI	2	Type
	3	Material

Mini indexing plungers

covered indexing mechanism, with and without rest position

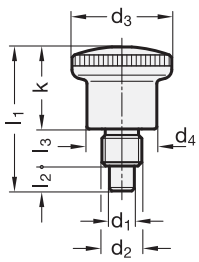

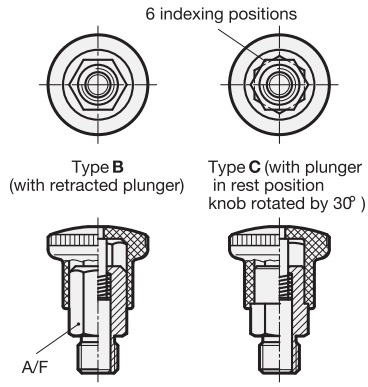

Mounting information

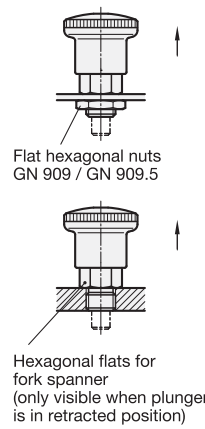

Rost frei — Inox Stainless Steel

Inch — Inch sizes available

3 Type

B without rest position
C with rest position

1 d_1 Plunger h9 Bore $^{+0,03}_{+0,08}$	2 d_2		d_3	d_4	l_1	l_2 min.	l_3	k	A/F	Spring load in N ≈ initial	end
4	M 8	M 8 x 1	21	15	27,5	5	6	16,5	10	4	12
5	M 10	M 10 x 1	25	18	34	6	8	20	12	6	16
6	M 10	M 10 x 1	25	18	34	6	8	20	12	6	16
6	M 12	M 12 x 1,5	28	20	40,5	7	10	23,5	14	10	23
7	M 12	M 12 x 1,5	28	20	40,5	7	10	23,5	14	10	23
8	M 16	M 16 x 1,5	33	23	47,5	10	12	25,5	17	11	35
10	M 16	M 16 x 1,5	33	23	47,5	10	12	25,5	17	11	35

Specification

- **GN 822.6**
  Socket Steel
  zinc plated, blue passivated
- **GN 822.7**
  Socket
  Stainless Steel AISI 303

This information applies to both standards:

- Plunger
  Stainless Steel AISI 303
- Spring
  Stainless Steel AISI 301
- Knob Plastic (Polyamide PA)
  - black, matt
  - not removable
- *Stainless Steel characteristics → Page 1144*
- *Plastic characteristics → Page 1141*
- *ISO-Fundamental tolerances → Page 1132*
- RoHS compliant

Accessory

- Distance bushings GN 609 / GN 609.5 or flat hexagonal nuts GN 909 / GN 909.5 are to be ordered separately.

Information

Mini indexing plungers GN 822.6 / GN 822.7 are distinguished for their small dimensions.

Based on the principle of the GN 822 mini indexing plungers, this model combines their clever type of construction with a complete series of all current sizes of bolts and threads. They provide a reasonably priced alternative to the GN 607 / GN 607.1 indexing plungers of the appropriate sizes. To mount, first turn the mini indexing plunger in with the knurled button. Pulling the indexing pin will release the hexagon nut which can then be tightened with an open-end spanner.

They are inserted into position by holding them by the serrated knob. The spanner flats on the lock nut are revealed when retracting the pin, so that the mini indexing plunger can be easily tightened by means of a fork spanner.

In type C, the button can be turned by 30° after retracting the indexing pin, holding it in the "retraced" position using the indexing lock.

see also...

- *Range of indexing plungers → Page 402*

Steel-Mini indexing plungers
GN 822.6-8-M16x1,5-B (1 = 8, 2 = M16x1,5, 3 = B)

1	d_1
2	d_2
3	Type

Stainless Steel-Mini indexing plungers
GN 822.7-6-M12x1,5-C (1 = 6, 2 = M12x1,5, 3 = C)

1	d_1
2	d_2
3	Type

Mini indexing plungers

with and without rest position

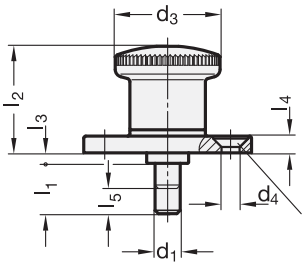

Type **B**
(with retracted plunger)

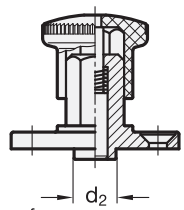

Bore for
countersunk screw
DIN 7991

Type **C** (with plunger
in rest position
knob rotated by 30°)

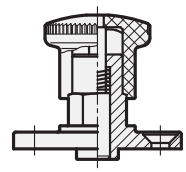

Rest position with
6 indexing positions (6x30°)

3 Type

B without rest position
C with rest position

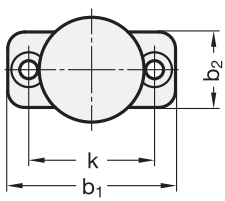

1 d_1 Plunger h9 Bore $^{+0,03}_{+0,08}$	2 l_1		b_1	b_2	d_2 –0,15	d_3	d_4	k	l_2	l_3	l_4	l_5 Stroke	Spring load in N ≈ initial	end
4	5	10	35	15	8	21	4,3	25	20,5	2	4	5	4	12
5	6	12	40	18	10	25	4,3	30	25,5	2,5	4	6	6	16
6	6	12	40	18	10	25	4,3	30	25,5	2,5	4	6	6	16
8	10	20	50	23	14	33	5,3	38	35	2,5	5	10	11	35
10	10	20	50	23	14	33	5,3	38	35	2,5	5	10	11	35

Specification

- Socket
  Zinc die casting
  - corrosion-resistant
    ZNDG Pass nano®-coating
  - anthracite coloured
- Plunger
  Stainless Steel AISI 303
- Spring
  Stainless Steel AISI 301
- Knob
  Plastic (Polyamide PA)
  - black, matt
  - not removable
- *ISO-Fundamental tolerances → Page 1132*
- *Stainless Steel characteristics → Page 1144*
- *Plastic characteristics → Page 1141*
- RoHS compliant

Information

Mini indexing plungers GN 822.8 are distinguished for their small dimensions. They are mounted by countersunk screws.

see also...
- *Range of indexing plungers → Page 402*

How to order		
GN 822.8-6-12-B (1 2 3)	1	d_1
	2	l_1
	3	Type

Mini indexing plungers

Open indexing mechanism, with and without rest position

Type **B**

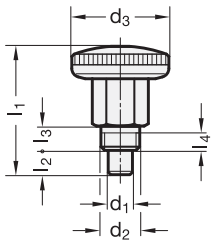

Plunger retracted

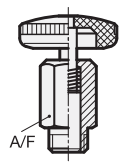

Type **C**

Plunger retracted
Knob rotated by 90°

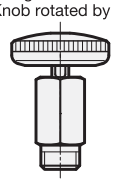

Side view

Mounting information

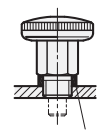

Distance bushing
GN 609 / GN 609.5

Rost frei — Inox Stainless Steel

2 Type

B without rest position
C with rest position

1

d_1 Plunger Bore $^{0}_{-0,06}$ $^{+0,05}_{+0,1}$	d_2	d_3	l_1	l_2 min.	l_3	l_4 min.	A/F	Spring load in N ≈ initial	end
4	M 8 x 0,75	21	26,5	5	5	3,5	10	4,5	12
5	M 8 x 0,75	21	26,5	5	5	3,5	10	4,5	12
6	M 10 x 1	25	34	7	7	4,5	12	5	18
7	M 10 x 1	25	34	7	7	4,5	12	5	18

Specification

3

- Steel — **ST**
  zinc plated, blue passivated
- Stainless Steel AISI 303 — **NI**
- Plunger
  Stainless Steel AISI 303
- Spring
  Stainless Steel AISI 301
- Knob Plastic (Polyamide PA)
  - black, matt
  - not removable
- *Stainless Steel characteristics → Page 1144*
- *Plastic characteristics → Page 1141*
- RoHS compliant

Accessory

- Distance bushings GN 609 / GN 609.5 are to be ordered separately.

Information

Mini indexing plungers GN 822.1 are distinguished for their small dimensions. They have been designed for installation in thin walled sheet metal constructions.

Type C with rest position is used for such applications where the plunger has to stay in its retracted position. To achieve this, the knob is rotated by 90° degrees after being retracted. A notch keeps the plunger in this position.

see also...
- *Range of indexing plungers → Page 402*
- *Distance bushings GN 609 / GN 609.5 → Page 450*

Steel-Mini indexing plungers		
1 2 3	1	d_1
GN 822.1-6-C-ST	2	Type
	3	Material

Stainless Steel-Mini indexing plungers		
1 2 3	1	d_1
GN 822.1-4-B-NI	2	Type
	3	Material

Indexing plungers

without rest position

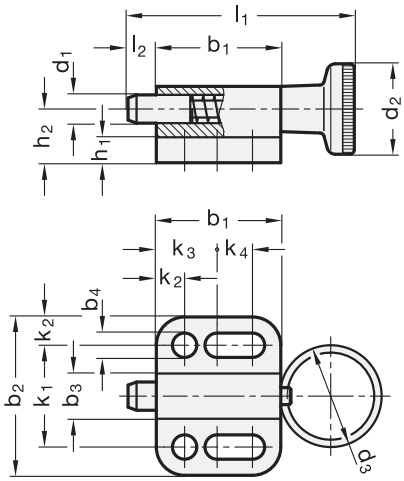

Plunger retracted

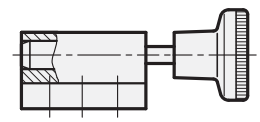

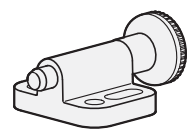

2 Type

A without rest position (lifting ring)

B without rest position (Knob)

1

d_1 Plunger h11 Bore $^{+0,03}_{+0,08}$	d_2	d_3	b_1	b_2	b_3	b_4 −0,2	h_1	h_2	k_1 ±0,05	k_2	k_3	k_4	l_1	l_2 ±0,5	Spring load in N ≈ initial	end
4	12	14	16,5	22	6	3,3	4	7	14	4	8	4,5	30,5	4	3	12
5	16	18	22	28	8	4,3	4,5	9,5	18	5	10	7	40	5	5	24
6	18	24	27,5	32	10	5,4	5	10,5	21	5,5	12	10	49	6	5	21
8	21	30	33	34	12	5,4	6	12,5	23	5,5	12	15,5	59	8	6	22

Specification

- Guide
  Zinc die casting
  plastic coated
  black, textured finish
- Plunger
  Stainless Steel AISI 303
- Spring
  Stainless Steel AISI 301
- Lifting ring
  Stainless Steel AISI 301
- Knob
  Plastic (Polyamide PA)
  - black, matt
  - not removable
- *ISO-Fundamental Tolerances → Page 1132*
- *Stainless Steel characteristics → Page 1144*
- *Plastic characteristics → Page 1141*
- RoHS compliant

Information

The screwing range of indexing plungers GN 417 is chosen in such a way that washers ISO 7092 can be used.

see also...

- *Range of indexing plungers → Page 402*
- *Positioning bushings GN 412.2 → Page 454*

How to order		
GN 417-6-B (1 2)	1	d_1
	2	Type

Indexing plungers

with rest position

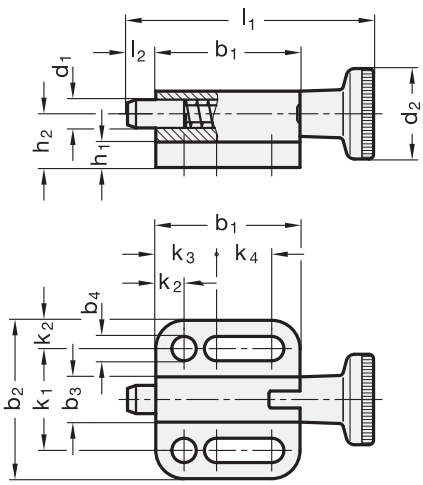

Plunger in rest position

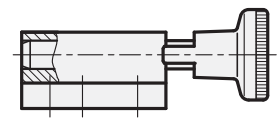

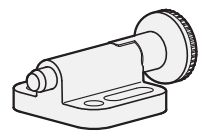

2 Type

C with rest position (Knob)

1

d_1 Plunger h11 Bore $^{+0,03}_{+0,08}$	d_2	b_1	b_2	b_3	b_4 −0,2	h_1	h_2	k_1 ±0,05	k_2	k_3	k_4	l_1	l_2 min.	Spring load in N ≈ initial	end
4	12	19	22	6	3,3	4	7	14	4	8	7	33	4	3	12
5	16	25,5	28	8	4,3	4,5	9,5	18	5	10	10,5	43,5	5	5	24
6	18	30,5	32	10	5,4	5	10,5	21	5,5	12	13	52	6	5	21
8	21	37,5	34	12	5,4	6	12,5	23	5,5	12	20	63,5	8	6	22

Specification

- Guide
  Zinc die casting
  plastic coated
  black, textured finish
- Plunger
  Stainless Steel AISI 303
- Spring
  Stainless Steel AISI 301
- Knob
  Plastic Technopolymer (Polyamide PA)
  - black, matt
  - not removable
- *ISO-Fundamental Tolerances → Page 1132*
- *Stainless Steel characteristics → Page 1144*
- *Plastic characteristics → Page 1141*
- RoHS compliant

Information

Indexing plungers GN 417 type C with rest position are used for such applications where the plunger has to stay in its retracted position. To achieve this, the knob is rotated by 90° degrees after being retracted. A notch keeps the plunger in this position.

The screwing range is chosen in such a way that washers ISO 7092 can be used.

see also...
- *Range of indexing plungers → Page 402*
- *Positioning bushings GN 412.2 → Page 454*

How to order		
GN 417-8-C (1 2)	1	d_1
	2	Type

Locking plungers

Plunger in standard position protruded

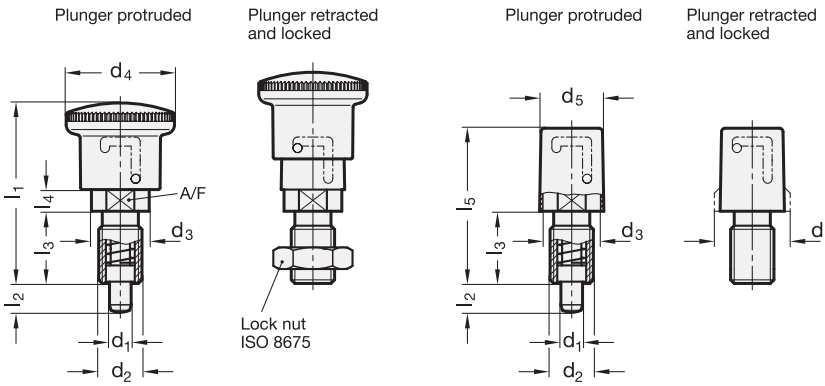

3 Type

- **A** with knob, without lock nut
- **AK** with knob, with lock nut
- **B** with key, without lock nut
- **BK** with key, with lock nut

1 d_1 Plunger $^{0}_{-0,05}$ Bore $^{+0,15}_{+0,07}$	2 d_2	d_3	d_4	d_5	d_6	l_1 ≈	l_2	l_3	l_4 ≈	l_5	A/F	Spring load in N ≈ initial	end
6	M 12 x 1,5	16	28	17	-	50	8	20	6	43	14	13	28
8	M 16 x 1,5	18	28	17	20	52	10	22	6	48	16	14	38

Specification

- Threaded body
  Steel zinc plated, blue passivated
- Plunger
  Stainless Steel AISI 303
- Spring
  Stainless Steel AISI 301
- Knob
  Plastic (Polyamide PA)
  - black, matt
  - not removable
- Sleeve
  Plastic (Polyamide PA)
  - black, matt
  - not removable
- *Stainless Steel characteristics → Page 1144*
- *Plastic characteristics → Page 1141*
- RoHS compliant

Accessory

- Keys GN 816-10
  (Locking plungers Ø 6 and Ø 8 have the same keys)

Information

If not operated, the plunger of the locking plungers GN 816 protrudes. To retract, move against the spring force and hold in the end position by turning by 90°.

The shape of the cam curve secures the plunger against accidental operation.

For the execution with operation with key (Type B / BK) a key is required to move the plunger. In this execution, a cover sleeve provides additional security and safety from unauthorized removal of the locking plunger. The cover sleeve also provides additional protection against malfunction caused by dirt.

see also...
- *Range of indexing plungers → Page 402*
- *Distance bushings GN 609 (to limit the thread length) → Page 450*
- *Mounting blocks GN 412.1 → Page 452*
- *Positioning bushings GN 412.2 → Page 454*
- *Flat hexagonal nuts GN 909 / GN 909.5 → Page 451*

Locking plungers

GN 816-8-M16x1,5-A (1 = 8, 2 = M16x1,5, 3 = A)

1	d_1
2	d_2
3	Type

Version with key (Type B / Type BK)

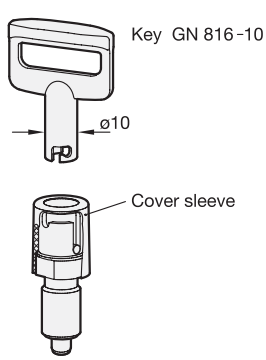

Assembly instruction

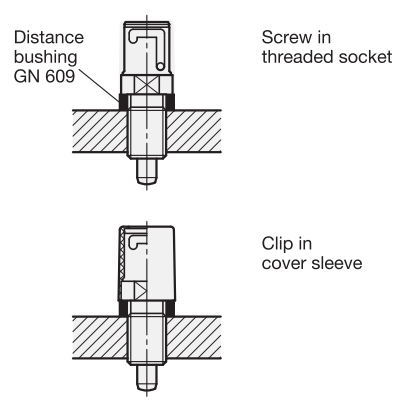

Locking plungers

Plunger in standard position retracted

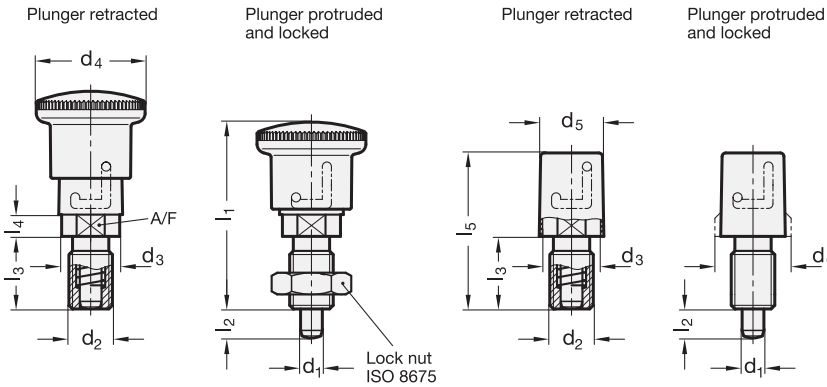

3 Type

- **A** with knob, without lock nut
- **AK** with knob, with lock nut
- **B** with key, without lock nut
- **BK** with key, with lock nut

1 d_1 Plunger $^{0}_{-0,05}$ Bore $^{+0,15}_{+0,07}$	2 d_2	d_3	d_4	d_5	d_6	l_1 ≈	l_2	l_3	l_4 ≈	l_5	A/F	Spring load in N ≈ initial	end
6	M 12 x 1,5	16	28	17	-	51,5	8	20	6	43	14	12	27
8	M 16 x 1,5	18	28	17	20	54,5	10	22	6	48	16	12	35

Specification

- Threaded body
  Steel zinc plated, blue passivated
- Plunger
  Stainless Steel AISI 303
- Spring
  Stainless Steel AISI 301
- Knob
  Plastic (Polyamide PA)
  - black, matt
  - not removable
- Sleeve
  Plastic (Polyamide PA)
  - black, matt
  - not removable
- *Stainless Steel characteristics → Page 1144*
- *Plastic characteristics → Page 1141*
- RoHS compliant

Accessory

- Keys GN 816.1-10
  (Locking plungers Ø 6 and Ø 8 have the same keys)

Information

If not operated, the plunger of the locking plungers GN 816 is retracted. To move out, move against the spring force and hold in the end position by turning by 90°.

The shape of the cam curve secures the plunger against accidental operation.

For the execution with operation with key (Type B / BK) a key is required to move the plunger. In this execution, a cover sleeve provides additional security and safety from unauthorized removal of the locking plunger. The cover sleeve also provides additional protection against malfunction caused by dirt.

see also...
- *Range of indexing plungers → Page 402*
- *Distance bushings GN 609 (to limit the thread length) → Page 450*
- *Mounting blocks GN 412.1 → Page 452*
- *Positioning bushings GN 412.2 → Page 454*
- *Flat hexagonal nuts GN 909 / GN 909.5 → Page 451*

Locking plungers

GN 816.1-6-M12x1,5-B (1 = 6, 2 = M12x1,5, 3 = B)

1	d_1
2	d_2
3	Type

Locking plungers

Keys GN 816.1-10 / Assembly instruction

Version with key (Type B / Type BK)

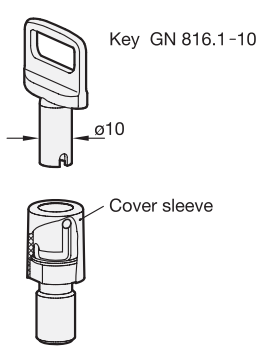

Assembly instruction

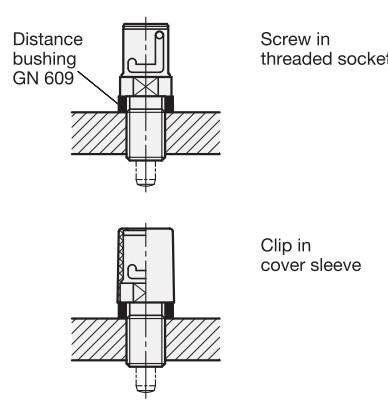

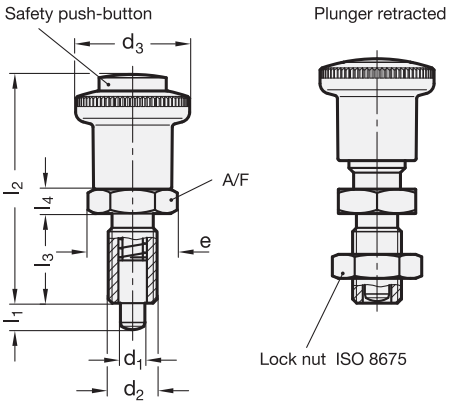

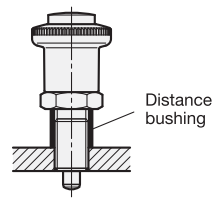

3 Type

- **A** with safety mechanism, without rest position, without lock nut
- **AK** with safety mechanism, without rest position, with lock nut
- **B** without safety mechanism, with rest position, without lock nut
- **BK** without safety mechanism, with rest position, with lock nut
- **C** with safety mechanism and rest position, without lock nut
- **CK** with safety mechanism and rest position, with lock nut

1 d_1 Plunger $^{-0,02}_{-0,04}$ Bore H7	2 l_1 min.	d_2	d_3	e	l_2 ≈	l_3	l_4	A/F	Spring load in N ≈ initial	end	Axial load in N
6	6	M 12 x 1,5	28	21,9	56	22	6	19	6,5	19	120
6	9	M 12 x 1,5	28	21,9	56	22	6	19	6	25	120
8	8	M 16 x 1,5	28	21,9	62	26	8	19	8,5	26	120
8	12	M 16 x 1,5	28	21,9	62	26	8	19	8,5	28	120
10	12	M 16 x 1,5	28	21,9	62	26	8	19	9,5	30	120

Specification

- Steel
  - blackened
  - Plunger hardened
- Knob
  Plastic (Polyamide PA)
  - black-grey, RAL 7021, matt
  - temperature resistant up to 80 °C
  - not removable
- Safety push-button
  Plastic (Polyamide PA)
  red, RAL 3000, matt
- *ISO-Fundamental Tolerances → Page 1132*
- *Plastic characteristics → Page 1141*
- RoHS compliant

Information

Safety indexing plungers GN 414 in type A and C are used when the inadvertent retract of the plunger pin is to be prevented. The plunger pin is locked in one or both end positions and can be unlocked only with the red safety push button.

Types B and C also feature an index lock if the plunger is not to protrude temporarily, i.e. if it is to be held in the retracted position.

In every case, the safety lock engages in the front end position, i.e. automatically if the indexing pin protrudes, with the locking mechanism housed fully in the operating button and protected from malfunctions. The specified axial load bearing capacity refers to the locking force of the bolt against inadvertent operation which must not be exceeded.

see also...
- *Range of indexing plungers → Page 402*
- *Distance bushings GN 609 (to limit the thread length) → Page 450*

How to order		
GN 414-8-12-A (1 2 3)	1	d_1
	2	l_1
	3	Type

Locking plungers

with PUSH-PUSH locking mechanism

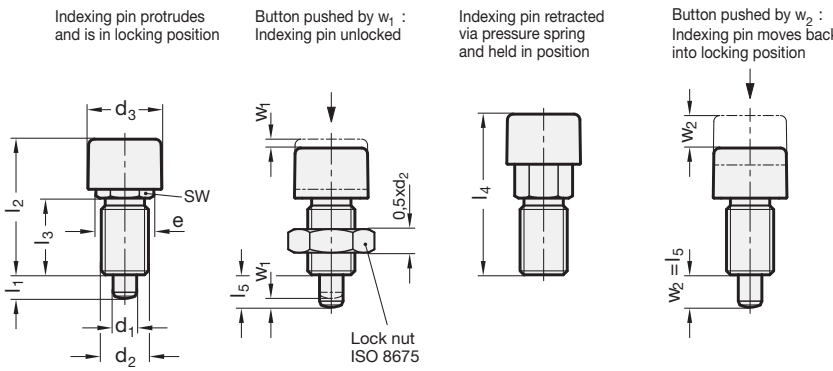

2 Type

A without lock nut
AK with lock nut

1

d_1 Plunger $^{-0.02}_{-0.05}$ Bore H7	d_2	d_3	e	l_1	l_2	l_3	l_4	l_5	A/F	w_1	w_2	Spring load in N ≈ initial	end
6	M 12 x 1,5	19	15	6	38	20	44,5	9	13	3	9	8,5	25
8	M 16 x 1,5	25	19	8	46	26	54,5	11	17	3	11	18	44

Specification

- Steel
  - nitrided
  - blackened
- Knob
  Plastic (Polyamide PA)
  black, matt
- *ISO-Fundamental Tolerances → Page 1132*
- *Plastic characteristics → Page 1141*
- RoHS compliant

Information

The indexing pin in the locking plungers GN 514 is moved via a so-called cardioid mechanism.

This mechanism means that the indexing pin is both extended and retracted alone by **pressing** the operating button (PUSH-PUSH locking mechanism).

Please note that the indexing pin **cannot absorb any axial forces** and that it retracts virtually by spring action; the indexing pin must therefore remain free and easy to move.

see also...
- *Range of indexing plungers → Page 402*
- *Distance bushings GN 609 (to limit the thread length) → Page 450*
- *Mounting blocks GN 412.1 → Page 452*
- *Positioning bushings GN 412.2 → Page 454*
- *Flat hexagonal nuts GN 909 → Page 451*

How to order 1 2		
GN 514-8-A	1	d_1
	2	Type

Clamping knobs with indexing plungers

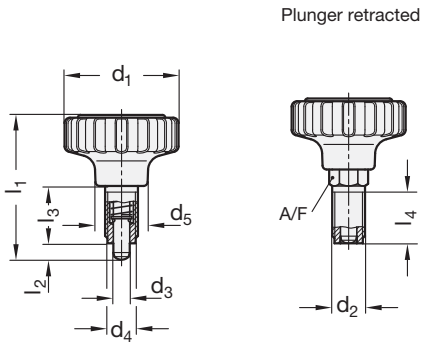

Assembly example

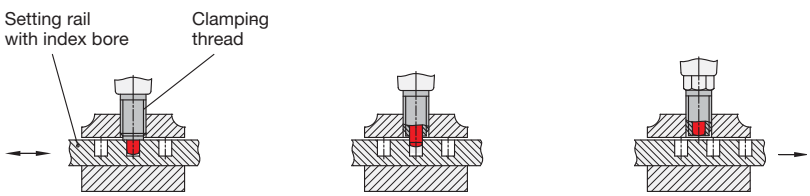

Setting rail positioned through indexing plunger, clamped with in position clamping handle

Clamping action released, indexing plunger still engaged

Clamping action released, indexing plunger disengaged, setting rail can be moved

1 d_1	2 d_2	3 d_3 Bolt $^{-0,02}_{-0,04}$ Bore G7	d_4	d_5	l_1	l_2	l_3	l_4 min.	A/F	Spring load in N ≈ initial	end
34	M 10 x 1	5	8,6	15,5	45	5	19	17	10	7	17
42	M 12 x 1,5	6	9,9	19	53	6	21	19	12	9	24
53	M 12 x 1,5	6	9,9	22,5	59	6	21	19	12	9	24
53	M 16 x 1,5	8	13,9	22,5	68	8	28	26	16	11	30

Specification

- Knurled knob 7336
  Plastic (Polyamide PA)
  black, matt
- Cover cap
  Plastic (Polyamide PA)
  light grey, matt
- Fixing thread Steel
  zinc plated, blue passivated
- Plunger
  Stainless Steel AISI 303
- *ISO-Fundamental Tolerances → Page 1132*
- *Stainless Steel characteristics → Page 1144*
- *Plastic characteristics → Page 1141*
- RoHS compliant

Information

Clamping knobs with indexing plunger GN 7336.7 are used for positioning, securing and clamping adjusting elements at the same time.

The axial movement of the handle (pulling) pulls the indexing pin from the engaged position against the spring force, with the star know at the same time remaining connected with form-lock to the clamping screw via a hexagonal element, allowing both clamping and releasing.

see also...

- *Range of indexing plungers → Page 402*
- *Knurled knobs GN 7336 → Page 314*
- *Flat hexagonal nuts GN 909 / GN 909.5 → Page 451*

How to order

GN 7336.7-42-M12x1,5-6 (1 = 42, 2 = M12x1,5, 3 = 6)

1	d_1
2	d_2
3	d_3

Clamping indexing plungers

with safety function

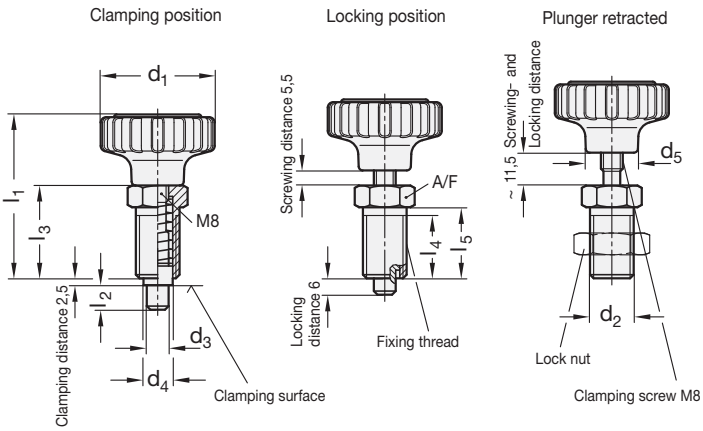

Assembly example

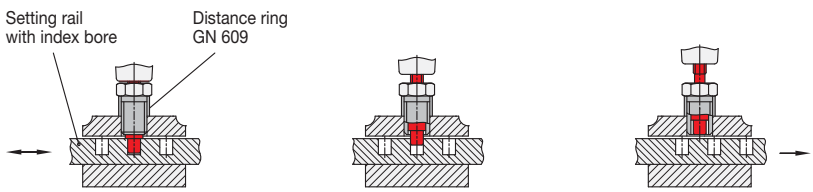

Setting rail positioned through indexing plunger, clamped with the clamping surface of the indexing plunger via the knurled knob and the clamping screw M8

Clamping action released and clamping screw M8 fully turned outh. Indexing plunger remains engaged (safety funktion)

Clamping screw no longer engaged, the indexing plunger can now pulled out of indexing bore

1 d_1	2 d_2	3 d_3 Plunger $^{-0,02}_{-0,04}$	Bore G7	d_4	d_5	l_1	l_2	l_3	l_4 min.	l_5	A/F	Spring load in N ≈ initial	end
42	M 16 x 1,5	6	8	11	19	60	9	34	23	26	19	14	26
53	M 16 x 1,5	6	8	11	24	66	9	34	23	26	19	14	26

Specification

- Knurled knob
  Plastic (Polyamide PA)
  black, matt
- Cover cap
  Plastic (Polyamide PA)
  light grey, matt
- Fixing thread
  Steel zinc plated, blue passivated
- Plunger
  Steel nitrided and blackened
- *ISO-Fundamental Tolerances → Page 1132*
- *Plastic characteristics → Page 1141*
- RoHS compliant

Information

Clamping indexing GN 7336.8 plungers are an advanced development of the GN 7336.7 clamping knobs with indexing plunger.

Like the latter, they are used for positioning, securing and clamping adjusting elements at the same time. This configuration ensures that the indexing pin cannot be pulled from the indexing bore by turning the knurled knob, but only be deliberately pulling the handle (safety function).

see also...
- *Range of indexing plungers → Page 402*
- *Distance bushings GN 609 (to limit the thread length) → Page 450*
- *Flat hexagonal nuts GN 909 / GN 909.5 → Page 451*

How to order

GN 7336.8-42-M16x1,5-6 (1 = d_1, 2 = d_2, 3 = d_3)

Knurled knobs GN 7336 → *Page 314*
Clamping knobs with indexing plungers GN 7336.7 → *Page 446*
Clamping indexing plungers GN 7336.8 → *Page 447*

Spring bolts

Normal position:
Plunger retracted

Type **A** Type **DK**

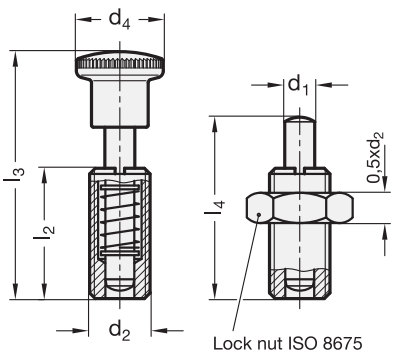

Operating position:
Plunger protruded

Type **A** Type **D**

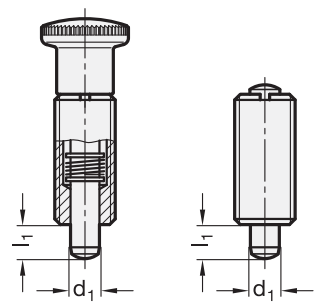

Identification **2**

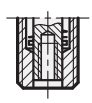

Identification **2**

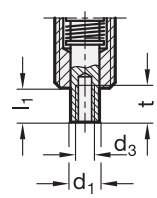

Inox
Stainless
Steel

2 Type

- **A** with knob, without lock nut
- **AK** with knob, with lock nut
- **D** without knob, without lock nut
- **DK** without knob, with lock nut

3 Identification no.

- **1** Plunger without internal thread
- **2** Plunger with internal thread

1

d_1 Plunger $^{-0,02}_{-0,04}$ Bore H7	d_2	d_3	d_4	l_1 ≈	l_2	l_3 ≈	l_4 ≈	t min.	Spring load in N ≈ Steel initial	Steel end	Stainless Steel initial	Stainless Steel end
6	M 12 x 1,5	M 4	19	7	26	49	35	7	9	28	8	21
8	M 16 x 1,5	M 5	23	9	34	65	48	9	12	40	11	32
10	M 20 x 1,5	M 6	28	11	43	78	57	12	22	50	18	43

Specification

4

- Threaded socket
  Steel
  blackened — **ST**
- Threaded socket
  Stainless Steel AISI 303 — **NI**
- Plunger
  Stainless Steel
  - AISI 303
  - chemically nickel plated
- Knob
  Plastic (Polyamide PA)
  - black, matt
  - not removable
- *ISO-Fundamental Tolerances → Page 1132*
- *Stainless Steel characteristics → Page 1144*
- *Plastic characteristics → Page 1141*
- RoHS compliant

Information

The plunger in the GN 313 spring bolts does not protrude in the inoperative position.

It can be operated manually or in Type D and DK mechanically (pneumatic cylinder, cam plate, etc.) when it will protrude only as long as it is operated.

Using the internal thread at identification 2 on the pressure side, special pressure bolts or a rod arrangement can be operated, for instance.

see also...
• *Spring elements GN 513 → Page 498*

How to order

1 2 3 4
GN 313-8-AK-1-ST

1	d_1
2	Type
3	Identification no.
4	Material

Distance bushings

for indexing plungers assembly

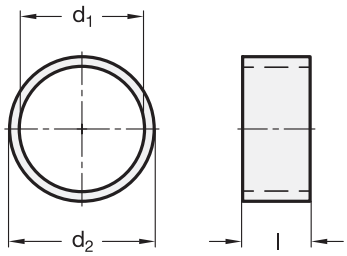

Application examples

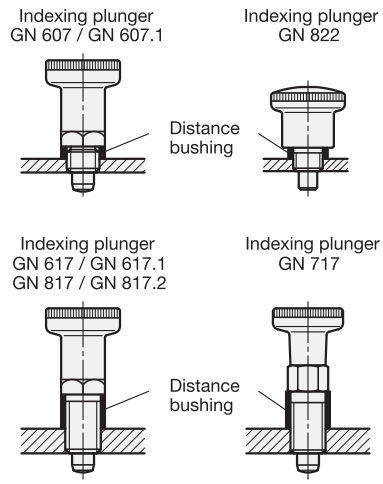

Rost frei — Inox Stainless Steel

1 d_1 H12	2 d_2 −0,1	3 Length l ±0,1							for Indexing plungers / Mini indexing plungers with thread-Ø	GN 414	GN 514	GN 607 GN 607.1	GN 612.8	GN 617 GN 617.1 GN 617.2	GN 717	GN 816 GN 816.1	GN 817 GN 817.2	GN 817.4	GN 822	GN 7336.8
6	7	2	4	6	8	-	-	-	M 6	-	-	-	-	-	x	-	-	-	-	-
8	10	2	4	6	8	10	-	-	M 8	-	-	-	-	-	x	-	x	-	x	-
10	12	2	4	6	8	10	12	-	M 10	-	-	-	-	x	x	-	x	-	x	-
12*	13	2	4	6	8	10	-	-	M 12	-	x	-	-	-	-	-	-	-	-	-
12	14	2	4	6	8	10	12	14	M 12	-	-	-	-	x	x	x	x	-	-	-
12	17	2	4	6	8	10	12	-	M 12	x	-	x	-	-	-	-	-	-	-	-
16	17	2	4	6	8	10	12	-	M 16	-	x	-	-	-	x	-	x	x	-	-
16*	18	2	4	6	8	10	12	14	M 16	-	-	-	x	-	-	x	-	-	-	-
16	19	2	4	6	8	10	12	-	M 16	x	-	x	-	x	-	-	-	-	-	x
20	22	6	8	10	12	14	16	18	M 20	-	-	-	-	x	-	-	x	x	-	-

* Only GN 609

Specification

- **GN 609**
  Steel
  blackened
- **GN 609.5**
  Stainless Steel AISI 303
- *ISO-Fundamental Tolerances → Page 1132*
- *Stainless Steel characteristics → Page 1144*
- RoHS compliant

Information

Distance bushings GN 609 / GN 609.5 compensate for the body thread lengths on the indexing plungers to allow mounting through walls of varying thickness.

Steel-Distance bushing		
1 2 3	1	d_1
GN 609-12-14-8	2	d_2
	3	Length l

Stainless Steel-Distance bushing		
1 2 3	1	d_1
GN 609.5-16-17-4	2	d_2
	3	Length l

Flat hexagon nuts

for indexing plungers / cam action indexing plungers

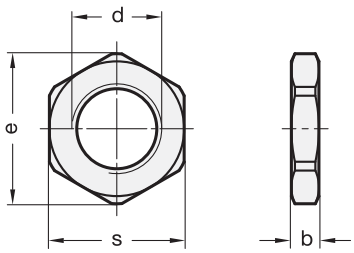

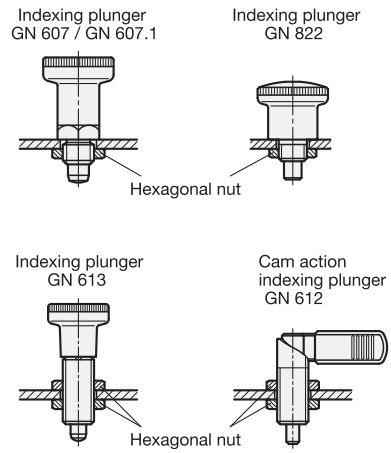

Rost frei — Inox Stainless Steel

d [1]	b	e	s
M 8 x 1	3,5	14,3	13
M 10 x 1	3,5	16,6	15
M 12 x 1,5	4	18,9	17
M 16 x 1,5	4,5	24,5	22
M 20 x 1,5	4,5	29,5	27

Specification [2]

- Steel
  blackened **BT**
- Stainless Steel AISI 303
- *Stainless Steel characteristics* → *Page 1144*
- RoHS compliant

Information

With their smaller dimensions, flat hexagon nuts GN 909 / GN 909.5 expand the mounting options of indexing plungers and cam action indexing plungers.

Flat hexagonal nuts, Steel [1] [2] GN 909-M10x1-BT		
	1	d
	2	Finish

Flat hexagonal nuts, Stainless Steel [1] GN 909.5-M12x1,5		
	1	d

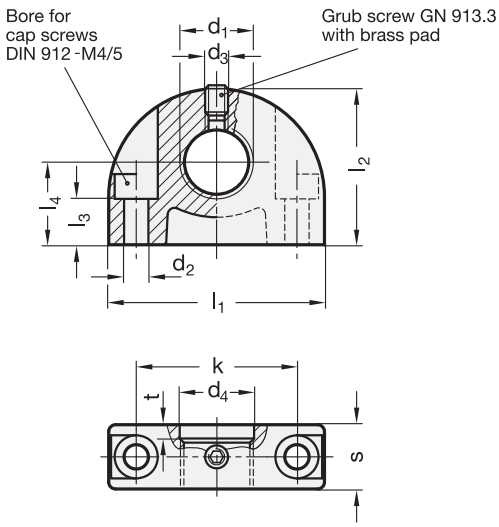

Example of application

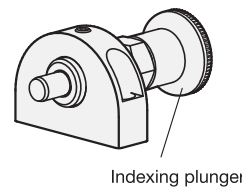

1 l_1	2 d_1		d_2	d_3	d_4	k	l_2	l_3	l_4	s	t
35	M 8	M 8 x 1	4,3	M 4	8,2	25	26	6	14	12	2
35	M 10	M 10 x 1	4,3	M 4	10,2	25	26	6	14	12	2
35	M 12	M 12 x 1,5	4,3	M 4	12,2	25	26	6	14	12	3
47	M 16	M 16 x 1,5	5,3	M 5	16,2	35	34	10	18	14	3
47	-	M 20 x 1,5	5,3	M 5	20,2	35	34	10	18	14	3

Specification

- Zinc die casting
- plastic coated
  black, textured finish
- RoHS compliant

Information

Mounting blocks GN 412.1 are a reasonably priced fitting aid for indexing plungers, cam action indexing plungers and for setting bolts and buffers.

To position the indexing pin of an indexing plunger or cam action indexing plunger, they can also hold GN 412.2 positioning bushings.

see also...
- *Positioning bushings GN 412.2 → Page 454*

How to order		
GN 412.1-35-M10x1 (1 = 35, 2 = M10x1)	1	l_1
	2	d_1

Mounting blocks

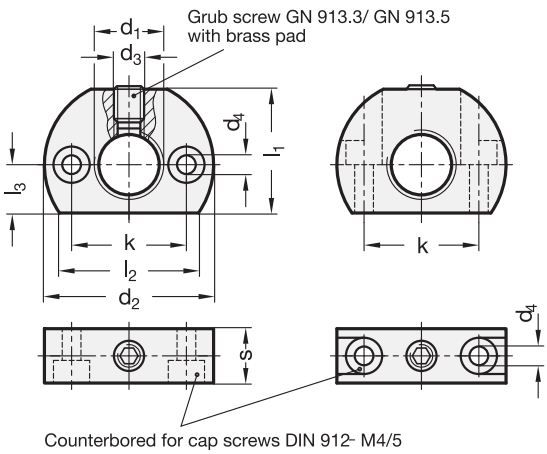

Example
Type B

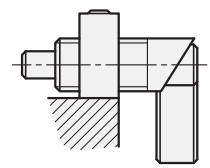

Inox
Stainless
Steel

2 Type

A fixing holes parallel to plunger

B fixing holes vertical to plunger

1

d_1	d_2	d_3	d_4	k ±0,1	l_1	l_2 ≈	l_3	s
M 12 x 1,5	32	M 5	4,5	21	22	26,5	9	12
M 16 x 1,5	46	M 8	5,5	32	33	37	13	15
M 20 x 1,5	46	M 8	5,5	32	33	37	13	15

Specification

3

- Steel
  - blackened
  - Grub screw GN 913.3 with brass pad
- Stainless Steel AISI 303 **NI**
- Grub screw GN 913.5 with brass pad
- *Stainless Steel characteristics → Page 1144*
- RoHS compliant

Information

Mounting blocks GN 612.1 broaden the mounting possibilities and are an added feature for the cam action indexing plungers GN 612 and cam action indexing plungers GN 712 / GN 712.1.

To position the indexing pin of an indexing plunger or cam action indexing plunger, they can also hold GN 412.2 positioning bushings.

see also...

- *Positioning bushings GN 412.2 → Page 454*
- *Grub screws GN 913.3 / GN 913.5 → Page 520*

Steel-Mounting block		
GN 612.1-M20x1,5-A (1, 2)	1	d_1
	2	Type

Stainless Steel-Mounting block		
GN 612.1-M16x1,5-B-NI (1, 2, 3)	1	d_1
	2	Type
	3	Material

Positioning bushings

for indexing plungers, cam action indexing plungers

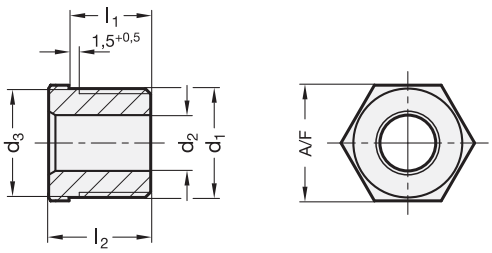

Assembly examples

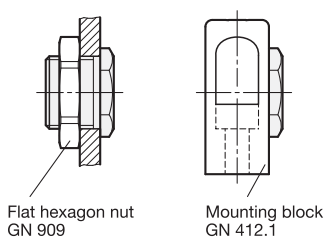

Example of application

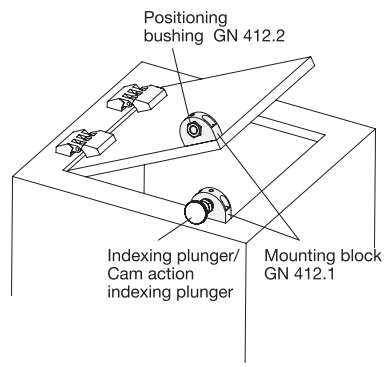

1 d_1	2 d_2 +0,1 Bore	d_3 −0,05	l_1 −0,2	l_2	A/F
M 12 x 1,5	B 4,2	12	10	13	13
M 12 x 1,5	B 5,2	12	10	13	13
M 12 x 1,5	B 6,2	12	10	13	13
M 16 x 1,5	B 8,2	16	12	15	17
M 16 x 1,5	B 10,2	16	12	15	17
M 16 x 1,5	B 12,2	16	12	15	17

Specification

- Steel
  - hardened
  - blackened
- RoHS compliant

Information

Positioning bushings GN 412.2 are used in connection with bolts of indexing plungers and cam action indexing plungers.

The threads are adapted to the mounting blocks GN 412.1 and GN 612.1.

see also...

- *Mounting blocks GN 412.1 → Page 452*
- *Mounting blocks GN 612.1 → Page 453*
- *Flat hexagonal nuts GN 909 → Page 451*

How to order		
GN 412.2-M12x1,5-B5,2 (1 = d_1, 2 = d_2)	1	d_1
	2	d_2

Positioning bushings with ramping cone

for indexing plungers

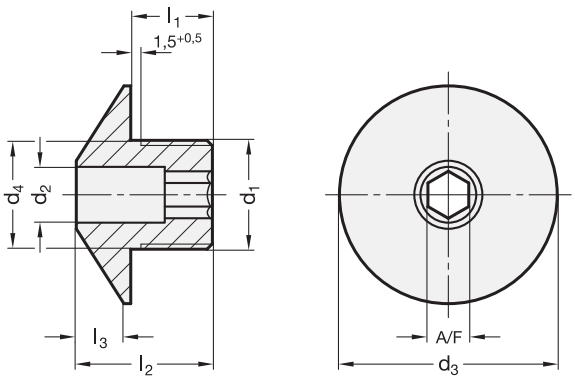

Assembly examples

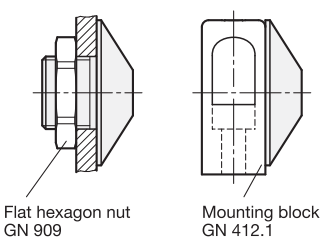

Example of application

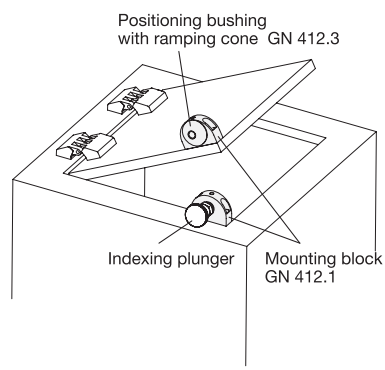

1 d_1	2 d_2 +0,1 Bore	d_3	d_4 −0,05	l_1	l_2	l_3	A/F
M 12 x 1,5	B 5,2	24	12	10	16	5	4
M 12 x 1,5	B 6,2	24	12	10	16	5	4
M 16 x 1,5	B 8,2	32	16	12	20	7	6
M 16 x 1,5	B 10,2	32	16	12	20	7	6

Specification

- Steel
  - hardened
  - blackened
- RoHS compliant

Information

Positioning bushings with ramping cone GN 412.3 are used in connection with bolts of indexing plungers.

The threads are adapted to the mounting blocks GN 412.1 and GN 612.1.

see also...

- *Mounting blocks GN 412.1 → Page 452*
- *Mounting blocks GN 612.1 → Page 453*
- *Flat hexagonal nuts GN 909 → Page 451*

How to order		
GN 412.3-M16x1,5-B8,2 (1 = d_1, 2 = d_2)	1	d_1
	2	d_2

Cam action indexing plungers

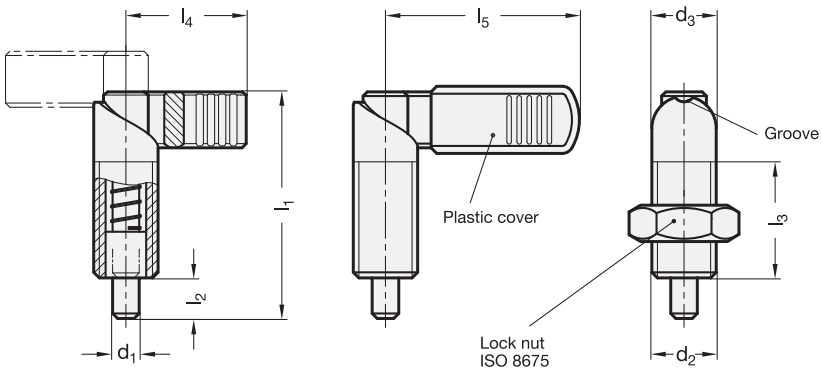

Inox Stainless Steel

Inch sizes available

3 Type

- **A** without plastic cover, without lock nut
- **B** with plastic cover, without lock nut
- **AK** without plastic cover, with lock nut
- **BK** with plastic cover, with lock nut

1 d_1 Plunger $^{-0,02}_{-0,04}$ Bore H7	2 d_2		d_3	l_1	l_2	l_3 +1,5	l_4	l_5	Spring load in N ≈ Steel initial	Steel end	Stainless Steel initial	Stainless Steel end
4*	M 10	M 10 x 1	10	37,5	6	19	21	-	8,5	25	8,5	25
5*	M 10	M 10 x 1	10	37,5	6	19	21	-	8,5	25	8,5	25
5	M 12	M 12 x 1,5	12	47	8	26	26	32	9	21	8	18
6*	M 10	M 10 x 1	10	37,5	6	19	21	-	8,5	25	8,5	25
6	M 12	M 12 x 1,5	12	47	8	26	26	32	9	21	8	18
6	M 16	M 16 x 1,5	16	56	10	30	32	42	12	32	11	29
8	M 12	M 12 x 1,5	12	47	8	26	26	32	9	21	8	18
8	M 16	M 16 x 1,5	16	56	10	30	32	42	12	32	11	29
8	M 20	M 20 x 1,5	20	69	12	36	37	52	21	58	21	57
10	M 16	M 16 x 1,5	16	56	10	30	32	42	12	32	11	29
10	M 20	M 20 x 1,5	20	69	12	36	37	52	21	58	21	57
12	M 20	M 20 x 1,5	20	69	12	36	37	52	21	58	21	57

* These sizes are only available in Type A and Type AK.

Specification

4

- Steel
  - blackened
  - Plunger nitrided
- Stainless Steel **NI**
  - AISI 303 / AISI 316L
  - Plunger chemically nickel plated
- Spring
  Stainless Steel AISI 301
- Plastic cover (Polyamide PA)
  black, matt
- *ISO-Fundamental Tolerances → Page 1132*
- *Stainless Steel characteristics → Page 1144*
- RoHS compliant

Information

Cam action indexing plungers GN 612 are used in cases where the locking pin must not protrude all the time. By rotating the lock through 180° the locking pin withdraws itself. A notch is provided in either position to prevent the lock from rotating.

see also...

- *Range of cam action indexing plungers → Page 412*

Cam action indexing plungers

1 2 3

GN 612-10-M16x1,5-AK

1	d_1
2	d_2
3	Type

Stainless Steel-Cam action indexing plungers

1 2 3 4

GN 612-12-M20x1,5-B-NI

1	d_1
2	d_2
3	Type
4	Material

Cam action indexing plungers

with flange for surface mounting

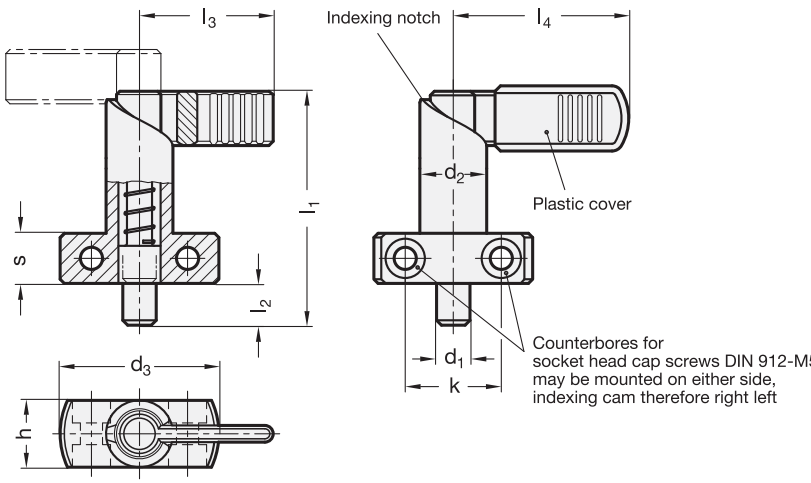

3 Type

A without plastic cover
B with plastic cover

1 d_1 Plunger $^{0}_{-0.05}$ Bore H7	2 d_2	d_3	h	k	l_1	l_2	l_3	l_4	s	Spring load in N ≈ initial	end
6	16	35	16	20	56	10	32	42	12	12	32
8	16	35	16	20	56	10	32	42	12	12	32
8	20	40	20	22	69	12	37	52	15	21	58
10	16	35	16	20	56	10	32	42	12	12	32
10	20	40	20	22	69	12	37	52	15	21	58
12	20	40	20	22	69	12	37	52	15	21	58

Specification

- Steel
  - blackened
  - Plunger nitrided
- Plastic cover (Polyamide PA) black, matt
- *ISO-Fundamental Tolerances → Page 1132*
- RoHS compliant

Information

Cam action indexing plungers GN 612.2 are used in cases where the locking pin must not protrude all the time. By rotating the lock through 180° the locking pin withdraws itself. A notch keeps the plunger in this position.

see also...
- *Range of cam action indexing plungers → Page 412*
- *Positioning bushings GN 412.2 → Page 454*

How to order		
GN 612.2-8-16-B (1 2 3)	1	d_1
	2	d_2
	3	Type

Cam action indexing plungers

for welding

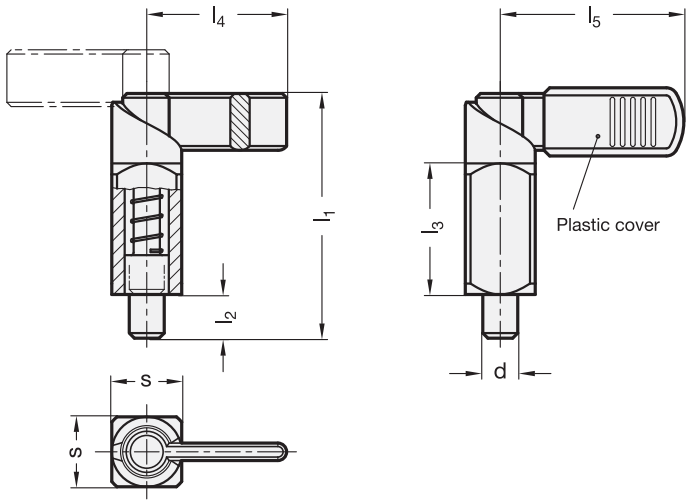

3 Type

A without plastic cover
B with plastic cover

1 d Plunger $^{-0,02}_{-0,04}$ Bore $^{+0,14}_{+0,1}$	2 s	l_1	l_2	l_3	l_4	l_5	Spring load in N ≈ initial	end
6	16	56	10	30	32	42	12	32
8	16	56	10	30	32	42	12	32
8	20	69	12	38	37	52	21	58
10	16	56	10	30	32	42	12	32
10	20	69	12	38	37	52	21	58
12	20	69	12	38	37	52	21	58

Specification

- Steel
  - blackened
  - weldable
  - Plunger nitrided
- Plastic cover (Polyamide PA) black, matt
- *ISO-Fundamental Tolerances → Page 1132*
- RoHS compliant

Information

Cam action indexing plungers GN 612.3 are used in cases where the locking pin must not protrude all the time. By rotating the lock through 180° the locking pin withdraws itself. A notch keeps the plunger in this position.

The square body can therefore be welded in any required position. In order to prevent a change in the spring load by the transferred heat we recommend spot welding the plunger body.

see also...
- *Range of cam action indexing plungers → Page 412*
- *Positioning bushings GN 412.2 → Page 454*

How to order		
GN 612.3-10-16-A (1 2 3)	1	d
	2	s
	3	Type

Cam action indexing plungers

Threaded body in zinc die casting

Plunger retracted

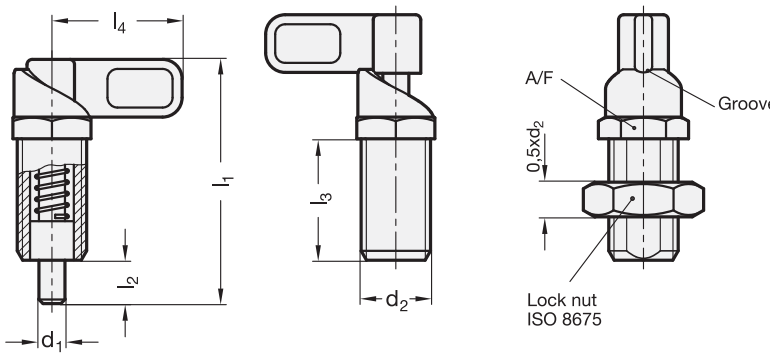

3 Type

A without lock nut
AK with lock nut

Mounting information

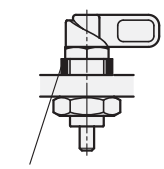

1 d_1 Plunger -0,05 Bore $^{+0,1}_{+0,05}$	2 d_2	l_1	l_2	l_3	l_4	A/F	Spring load in N ≈ initial	end
4	M 12 x 1,5	48	8	25	25	13	8	22
5	M 12 x 1,5	48	8	25	25	13	8	22
6	M 12 x 1,5	48	8	25	25	13	8	22
6	M 16 x 1,5	56,5	10	28	30	18	11	30
8	M 16 x 1,5	56,5	10	28	30	18	11	30
8	M 20 x 1,5	69,5	12	36	37	22	20	56
10	M 16 x 1,5	56,5	10	28	30	18	11	30
10	M 20 x 1,5	69,5	12	36	37	22	20	56
12	M 20 x 1,5	69,5	12	36	37	22	20	56

Specification

- Threaded body
  Zinc die casting
  - corrosion-resistant
    ZNDG Pass nano®-coating
  - anthracite
- Plunger
  Steel
  zinc plated, blue passivated
- Lever
  Plastic (Polyamide PA)
  - black, matt
  - not removable
- *Plastic characteristics → Page 1141*
- RoHS compliant

Information

Cam action indexing plungers GN 612.8 are used in cases where the locking pin must not protrude all the time. By rotating the lock through 180° the locking pin withdraws itself. The notch allows safe positioning.

These cam action indexing plungers made of zinc die casting are very reasonably priced design versions.

see also...
- *Range of cam action indexing plungers → Page 412*
- *Mounting blocks GN 612.1 → Page 453*
- *Mounting blocks GN 412.1 → Page 452*
- *Distance bushings GN 609 → Page 450*
- *Hexagonal nuts GN 909 → Page 451*

How to order

GN 612.8-8-M16x1,5-A (1 = 8, 2 = M16x1,5, 3 = A)

1	d_1
2	d_2
3	Type

Cam action indexing plungers

with flange for surface mounting

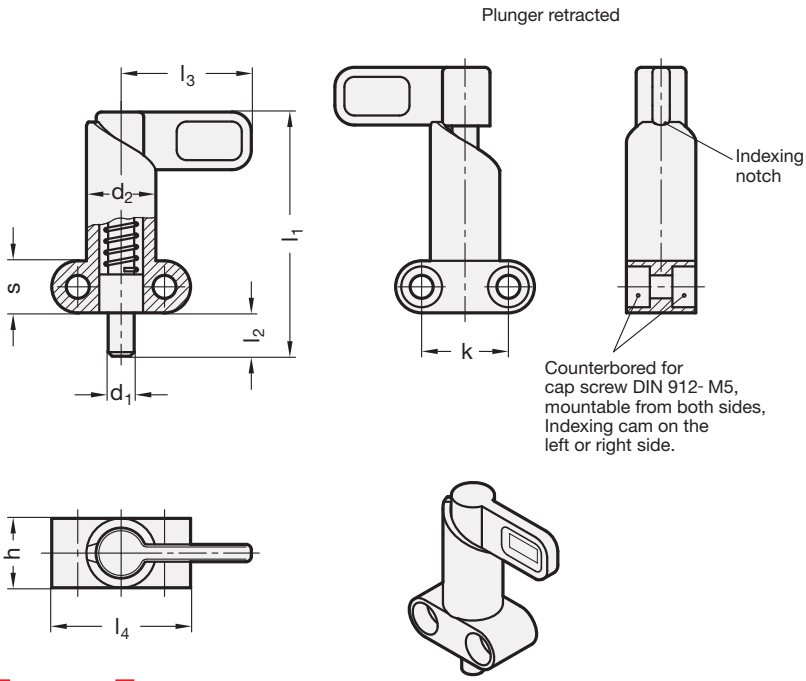

1 d_1 Plunger -0,05 Bore +0,1 +0,05	2 d_2	h	k	l_1 ≈	l_2	l_3	l_4	s
6	16	16	20	57	10	30	32	12
8	16	16	20	57	10	30	32	12
8	20	20	22	70	12	37	37	15
10	16	16	20	57	10	30	32	12
10	20	20	22	70	12	30	32	15
12	20	20	22	70	12	37	37	15

Specification

3

- Guide
  Zinc die casting
  plastic coated
  black, RAL 9005, textured finish ● SW
- Plunger
  Steel
  zinc plated, blue passivated
- Lever
  Plastic (Polyamide PA)
  - black, matt
  - not removable
- *Plastic characteristics → Page 1141*
- RoHS compliant

Information

Cam action indexing plungers GN 612.9 are used in cases where the plunger must not protrude all the time. By rotating the lever through 180° the plunger withdraws itself. The notch allows safe positioning.

see also...
- *Range of cam action indexing plungers → Page 412*
- *Positioning bushings GN 412.2 → Page 454*

How to order		
GN 612.9-10-16-SW (1 2 3)	1	d_1
	2	d_2
	3	Finish

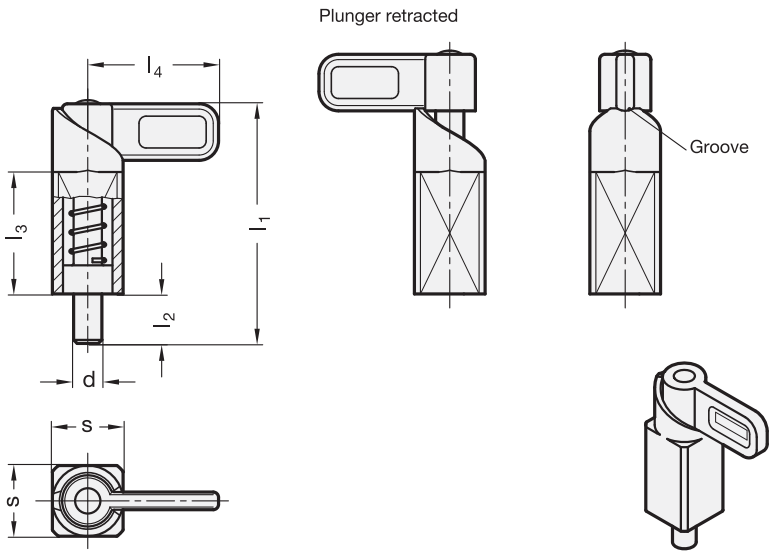

1 d Plunger $^{-0.05}_{-0.25}$ Bore $^{+0.1}_{+0.3}$	2 s	l_1 ≈	l_2	l_3	l_4	Spring load in N ≈ initial	end
8	20	68	14	35	37	16	55
10	20	68	14	35	37	16	55
12	20	68	14	35	37	16	55
14	20	68	14	35	37	16	55

Specification

- Guide
  Steel precision cast
  - weldable
  - blackened
- Latch
  Steel precision cast
  zinc plated, blue passivated
- Plunger
  Steel
  zinc plated, blue passivated
- RoHS compliant

Information

Spring latches GN 722.1 are used when the indexing pin is temporarily not allowed to protrude. The indexing pin retracts by turning the latch by 180°. A lock notch will hold the latch in both positions.

The square bar allows the latch to be welded in any desired position. To prevent excessive heating up and the resulting change in the spring properties, fixing with welding spots is recommended.

Spring latches GN 722.1 are designed for use in **steel construction** or in **locksmith** shops where less precise positioning / locking is normally required. The dimensional tolerances are therefore chosen to ensure that functional safety is guaranteed under dirt exposure and that cost-effetive production methods are used.

see also...
- *Range of cam action indexing plungers → Page 412*
- *Spring latches GN 722.2 / GN 722.3 (for surface mounting) → Page 462*

How to order		
GN 722.1-8-20 (1 = 8, 2 = 20)	1	d
	2	s

Spring latches

with flange for surface mounting

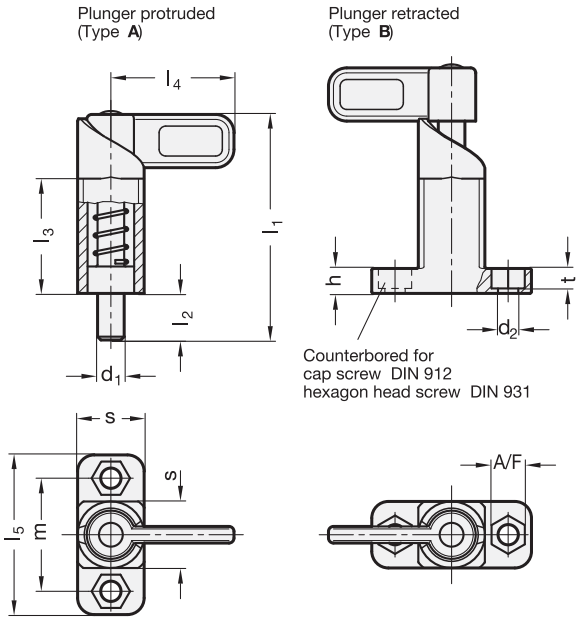

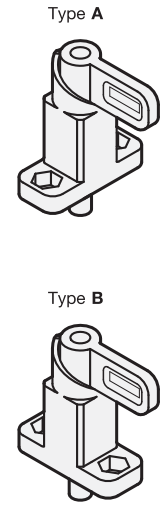

3 Type

A Latch position right-angled to fixing holes

B Latch position parallel to fixing holes

1 d_1 Plunger $^{-0,05}_{-0,25}$ Bore $^{+0,1}_{+0,3}$	2 s	d_2 +0,2	h	l_1 ≈	l_2	l_3	l_4	l_5	m	A/F	t	Spring load in N ≈ initial	end
8	20	6,1	7,5	68	14	35	37	48	34	10	6,1	16	55
10	20	6,1	7,5	68	14	35	37	48	34	10	6,1	16	55
12	20	6,1	7,5	68	14	35	37	48	34	10	6,1	16	55
14	20	6,1	7,5	68	14	35	37	48	34	10	6,1	16	55

Specification

4

- Guide
  Steel precision cast
  - zinc plated, blue passivated **ZB**
  - zinc plated and plastic coated black, textured finish **SW**
- Latch
  Steel precision cast
  zinc plated, blue passivated
- Plunger
  Steel
  zinc plated, blue passivated
- RoHS compliant

Information

Spring latches GN 722.2 are used when the indexing pin is temporarily not allowed to protrude. The indexing pin retracts by turning the latch by 180°. A lock notch will hold the latch in both positions.

Spring latches GN 722.2 are designed for use in **steel construction** or in **locksmith shops** where less precise positioning / locking is normally required. The dimensional tolerances are therefore chosen to ensure that functional safety is guaranteed under dirt exposure and that cost-effetive production methods are used.

see also...
- *Range of cam action indexing plungers → Page 412*
- *Spring latches GN 722.1 (for welding) → Page 461*
- *Positioning bushings GN 412.2 → Page 454*

How to order

GN 722.2-12-20-A-SW (1 2 3 4)

1	d_1
2	s
3	Type
4	Colour

Spring latches

with flange for surface mounting

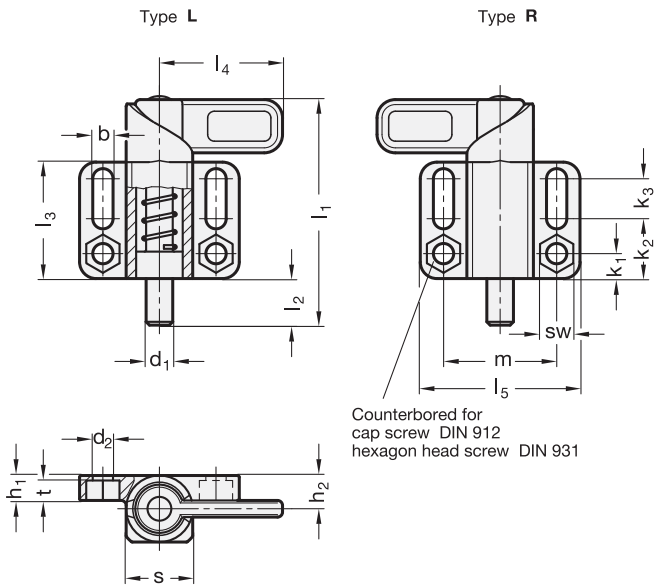

3 Type

L left indexing cam
R right indexing cam

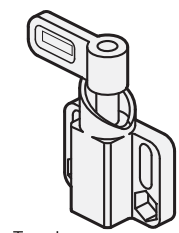

Type L
with retracted plunger

1 d_1 Plunger $^{-0,05}_{-0,25}$ Bore $^{+0,1}_{+0,3}$	2 s	b +0,3	d_2 +0,2	h_1	h_2	k_1	k_2	k_3	l_1 ≈	l_2	l_3	l_4	l_5	m	A/F	t	Spring load in N ≈ initial	end
8	20	6,1	6,1	7,5	10	7,5	18	12	68	14	35	37	48	34	10	6,1	16	55
10	20	6,1	6,1	7,5	10	7,5	18	12	68	14	35	37	48	34	10	6,1	16	55
12	20	6,1	6,1	7,5	10	7,5	18	12	68	14	35	37	48	34	10	6,1	16	55
14	20	6,1	6,1	7,5	10	7,5	18	12	68	14	35	37	48	34	10	6,1	16	55

Specification

3

- Guide
  Steel precision cast
  - zinc plated, blue passivated **ZB**
  - zinc plated and plastic coated black, textured finish **SW**
- Latch
  Steel precision cast
  zinc plated, blue passivated
- Plunger
  Steel
  zinc plated, blue passivated
- RoHS compliant

Information

Spring latches GN 722.3 are used when the indexing pin is temporarily not allowed to protrude. The indexing pin retracts by turning the latch by 180°.

A lock notch will hold the latch in both positions.

Spring latches GN 722.3 are designed for use in **steel construction** or in **locksmith shops** where less precise positioning / locking is normally required. The dimensional tolerances are therefore chosen to ensure that functional safety is guaranteed under dirt exposure and that cost-effetive production methods are used.

see also...
- *Range of cam action indexing plungers → Page 412*
- *Spring latches GN 722.1 (for welding) → Page 461*
- *Positioning bushings GN 412.2 → Page 454*

How to order		
GN 722.3-14-20-L-SW (1 2 3 4)	1	d_1
	2	s
	3	Type
	4	Colour

Cam action indexing plungers

Plunger in standard position protruded

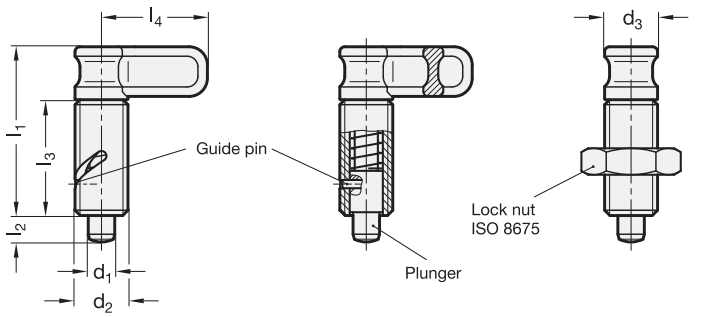

Plunger retracted

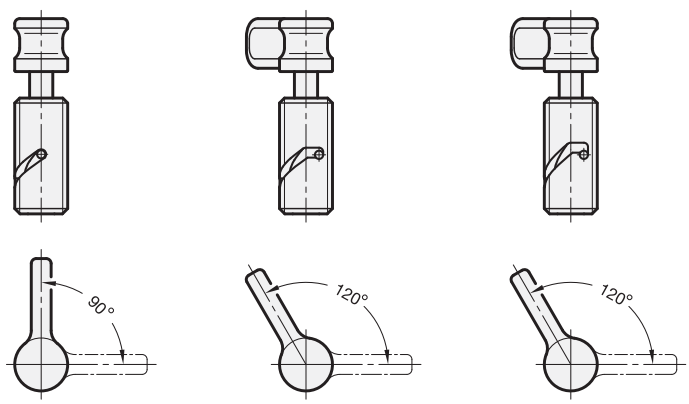

3 Type

- **A** without rest position, without lock nut
- **AK** without rest position, with lock nut
- **R** with rest position, without lock nut
- **RK** with rest position, with lock nut
- **S** with safety rest position, without lock nut
- **SK** with safety rest position, with lock nut

1 d_1 Plunger $^{-0,02}_{-0,04}$ Bore G7	2 d_2	d_3	l_1 ≈	l_2	l_3 min.	l_4	Spring load in N ≈ initial	end
6	M 16 x 1,5	16	51	8	35	32	6,5	20
8	M 16 x 1,5	16	51	8	35	32	6,5	20
10	M 16 x 1,5	16	51	8	35	32	6,5	20

Specification

- Steel
  zinc plated, blue passivated
- Plunger
  Stainless Steel AISI 303
- Latch
  Plastic (Polyamide PA)
  - black, matt
  - not removable
- *ISO-Fundamental Tolerances → Page 1132*
- *Stainless Steel characteristics → Page 1144*
- *Plastic characteristics → Page 1141*
- RoHS compliant

On request

- Stainless Steel version

Information

Cam action indexing plungers GN 712 are used in such applications where the plunger must not protrude continually. When turning the cam by 90° resp.120° degrees in anti-clockwise direction, the plunger is moved through a curved opening in the body. After that, the plunger is retracted.

Depending on the type, the plunger is moved back by a spring in its original position (Type A), is held in retracted position (Type R), resp. is secured against accidental operation (Type S).

In order to move the plunger, safety version Type S requires an additional lifting of the latch.

see also...
- *Range of cam action indexing plungers → Page 412*

How to order

GN 712-8-M16x1,5-R (1 = 8, 2 = M16x1,5, 3 = R)

1	d_1
2	d_2
3	Type

Cam action indexing plungers

Plunger in standard position retracted

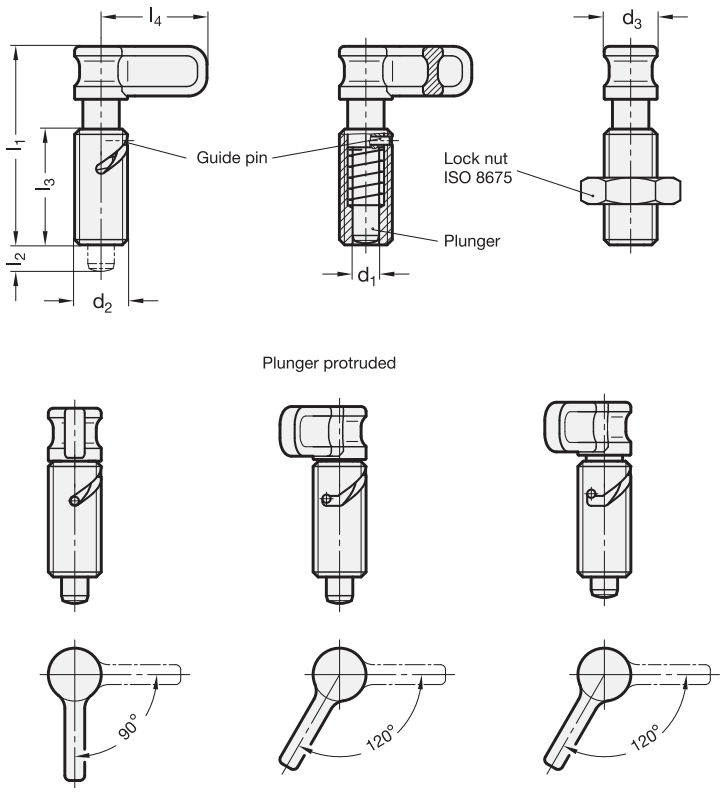

3 Type

- **A** without rest position, without lock nut
- **AK** without rest position, with lock nut
- **R** with rest position, without lock nut
- **RK** with rest position, with lock nut
- **S** with safety rest position, without lock nut
- **SK** with safety rest position, with lock nut

1 d_1 Plunger $^{-0,02}_{-0,04}$ Bore G7	2 d_2	d_3	l_1 ≈	l_2 ±0,5 Type A/AK Type R/RK	Type S/SK	l_3 min.	l_4	Spring load in N ≈	
6	M 16 x 1,5	16	60	8	6	35	32	7	16,5
8	M 16 x 1,5	16	60	8	6	35	32	7	16,5

Specification

- Steel
  zinc plated, blue passivated
- Plunger
  Stainless Steel AISI 303
- Latch
  Plastic Technopolymer (Polyamide PA)
  - black, matt
  - not removable
- *ISO-Fundamental Tolerances → Page 1132*
- *Plastic characteristics → Page 1141*
- RoHS compliant

On request

- Stainless Steel version

Information

Cam action indexing plungers GN 712.1 are used in such applications where the plunger has to protrude only occasionally. When turning the cam by 90° resp.120° degrees in clockwise direction, the plunger is moved through a curved opening in the body. After that, the plunger is protruded.

Depending on the type, the plunger is moved back by a spring in its original position (Type A), is held in protruded position (Type R), resp. is secured against accidental operation (Type S). In order to move the plunger, safety version Type S requires an additional lifting of the latch.

see also...

- *Range of cam action indexing plungers → Page 412*

How to order

GN 712.1-6-M16x1,5-S (1 = d_1, 2 = d_2, 3 = Type)

GN 113.1
Ball lock pins with clamping length compensation
→ Page 469

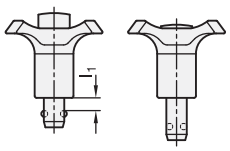

Ø Pin
Ø 6 ... Ø 12

for clamping length l_1
0 ... 5 / 5 ... 10

Material / Finish
- Stainless Steel AISI 303
- Knob
  Plastic

Other features
Locking pin tolerance: -0,04 / -0,08

Ball lock pins GN 113.1 are used for rapid fixing and, at the same time, play-free clamping of thin component.

By depressing the spring-loaded push button the pin advances by max. 5 mm and at the same time frees the two balls.

GN 113.3
GN 113.4
Ball lock pins
→ Page 470

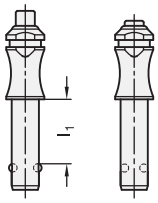

Ø Pin
Ø 5 ... Ø 20

for safeguard length l_1
10 ... 120

Material / Finish
- GN 113.3:
  Stainless Steel AISI 303
- GN 113.4:
  Stainless Steel AISI 630
  precipitation-hardened
  hard coated

Other features
Locking pin tolerance: -0,04 / -0,08

Ball lock pins GN 113.3 / GN 113.4 offer an axial lock. By pressing the spring loaded push button both balls are unlocked and by releasing it the balls are locked again.

These ball lock pins are reasonably priced and renowned for their compactness.

Ball lock pins GN 113.4 are hardened and have an extreme load capacity.

GN 113.5
GN 113.6
Ball lock pins
→ Page 471

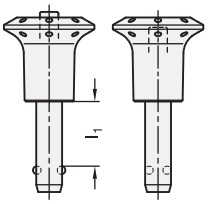

Ø Pin
Ø 5 ... Ø 16

for safeguard length l_1
10 ... 80

Material / Finish
- GN 113.5:
  Stainless Steel AISI 303
- GN 113.6:
  Stainless Steel AISI 630
  precipitation-hardened
  hard coated
- Knob
  Plastic

Other features
Locking pin tolerance: -0,04 / -0,08

The opersation of ball lock pins GN 113.5 / GN 113.6 is identical to GN 113.3 / GN 113.4, they only differ by a plastic knob instead of the turned hollow for grip.

GN 113.7
GN 113.8
Stainless Steel-
Ball lock pins
→ Page 472

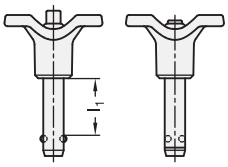

Ø Pin
Ø 5 ... Ø 16

for safeguard length l1
10 ... 80

Material / Finish
- GN 113.7:
  Stainless Steel AISI 303
- GN 113.8:
  Stainless Steel AISI 630
  precipitation-hardened
  hard coated
- T-handle
  Plastic

Other features
Locking pin tolerance: -0,04 / -0,08

Stainless Steel-Ball lock pins GN 113.7 / GN 113.8 are identical with Stainless Steel-Ball lock pins GN 113.3 / GN 113.4. But they have a T-handle made of plastic instead of the twisted grip.

The opersation of ball lock pins GN 113.7 / GN 113.8 is identical to GN 113.3 / GN 113.4, they only differ by a plastic T-handle instead of the turned hollow for grip.

GN 214.2
GN 214.3
Locking pins
with axial lock
→ Page 473

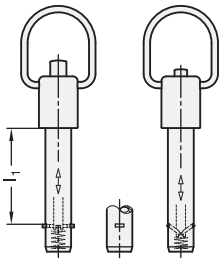

Ø Pin
Ø 6 ... Ø 16

for safeguard length l1
10 ... 80

Material / Finish
- GN 214.2:
  Pin Steel, zinc plated
- GN 214.3:
  Pin
  Stainless Steel AISI 303
- Knob / Push-button
  Plastic
- Pawls
  Stainless Steel AISI 304

Other features
Locking pin tolerance: -0,01

As with ball lock pins the locking pins GN 214.2 / GN 214.3 also offer an axial lock, which can also be released by depressing the push button in the knob and re-engaged by releasing thr button.

The locking mechanism consists of rectangular locking pawls in Stainless Steel. These pawls are withdrawn from their lock position by depresing the push button.

Locking pins GN 214.2 / GN 214.3 are very reasonably priced.

GN 114.2
Locking pins
with axial lock
→ Page 474

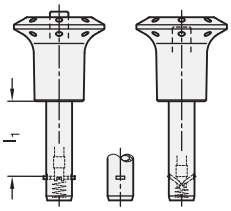

Ø Pin
Ø 6 ... Ø 20

for safeguard length l1
16 ... 80

Material / Finish
- Pin Steel, zinc plated
- Pawls
  Stainless Steel AISI 304
- Push button (slide) / Knob
  Plastic

Other features
Locking pin tolerance: 0 / -0,04

As with ball lock pins the locking pins GN 114.2 also offer an axial lock, which can also be released by depressing the push button in the knob and re-engaged by releasing thr button.

The locking mechanism consists of rectangular locking pawls in Stainless Steel. These pawls are withdrawn from their lock position by depresing the push button.

Locking pins GN 114.2 are very reasonably priced.

GN 114.3
GN 114.6
Locking pins
with axial lock
→ Page 475

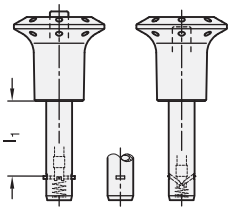

Ø Pin
Ø 6 ... Ø 20

for safeguard length l1
10 ... 80

Material / Finish
- Pin
  Stainless Steel AISI 303
- Pawls
  Stainless Steel AISI 304
- GN 114.3:
  Knob / Push-button
  Plastic
- GN 114.6:
  Knob / Push-button
  Stainless Steel AISI 304

Other features
Locking pin tolerance: 0 / -0,04

As with ball lock pins the locking pins GN 114.3 / GN 114.6 also offer an axial lock, which can also be released by depressing the push button in the knob and re-engaged by releasing thr button.

The locking mechanism consists of rectangular locking pawls in Stainless Steel. These pawls are withdrawn from their lock position by depresing the push button.

Locking pins GN 114.3 / GN 114.6 are very reasonably priced.

GN 124
Locking pins
with axial lock
with ball retainer
→ Page 476

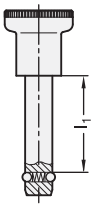

Ø Pin
Ø 6 ... Ø 12

for safeguard length l1
10 ... 50

Material / Finish
- Pin
  Stainless Steel AISI 303
- Knob
  Plastic

Other features
Locking pin tolerance: -0,04 / -0,08

Locking pins GN 124 are used for rapid fixing.

Contrary to ball lock pins GN 113.3 and GN 113.4 the balls are only kept in their lock position by the force of a thrust spring and not rigidly locked. The axial holding force is therefore reduced.

Stainless Steel-Ball lock pins

self-locking, with clamping length compensation

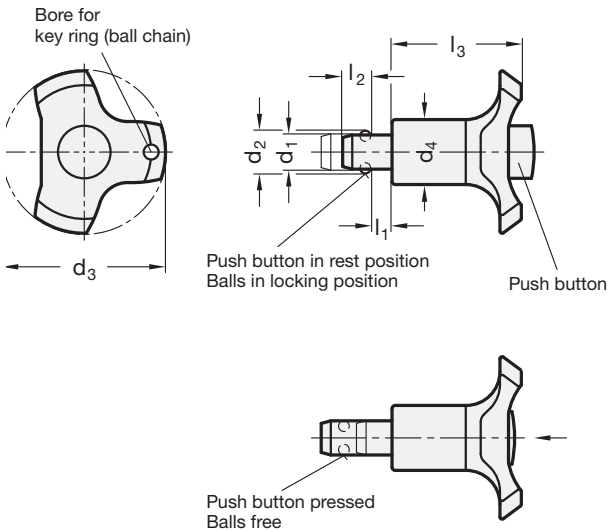

Example of application

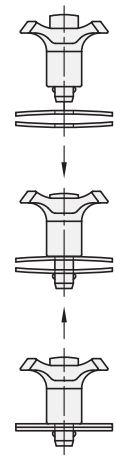

Rost frei — Inox Stainless Steel

1 d_1 $^{-0,04}_{-0,08}$	l_1 (5mm stroke) max.	2 min.	d_2	d_3	d_4	l_2	l_3	Locating bore H11	Clamping force max. in N ≈
6	5	0	7	38	17,5	5	30	6	16
6	10	5	7	38	17,5	5	30	6	18
8	5	0	9,5	38	17,5	6,5	30	8	16
8	10	5	9,5	38	17,5	6,5	30	8	18
10	5	0	12	47	23	8,7	36	10	21
10	10	5	12	47	23	8,7	36	10	23
12	5	0	14	47	23	9,4	36	12	21
12	10	5	14	47	23	9,4	36	12	23

Specification

- Pin
  Stainless Steel AISI 303
- Handle
  Plastic (Polyamide PA)
  - black-grey / red
  - temperature resistant up to 80 °C
- Balls
  Stainless Steel AISI 420C
- Spring
  Stainless Steel AISI 631
- *Stainless Steel characteristics → Page 1144*
- *Plastic characteristics → Page 1141*
- RoHS compliant

Accessory

- Ball chains GN 111 / GN 111.5 → *Page 477*
- Retaining cables GN 111.2 → *Page 478*
- Spiral retaining cables GN 111.4 → *Page 479*

Information

Stainless Steel-Ball lock pins GN 113.1 are used for rapid clamping and, at the same time, play-free clamping of thin components in particular where frequent clamping and releasing is required. A typical application is the alignment and clamping of sheet metal during a welding process.

By depressing the spring-loaded push button the pin advances by the length l_2 and at the same time frees the two balls.

see also...
- *Range of locking pins → Page 466*

How to order		
GN 113.1-6-5 (1 2)	1	d_1
	2	l_1 min.

Stainless Steel-Ball lock pins

with hollow for grip

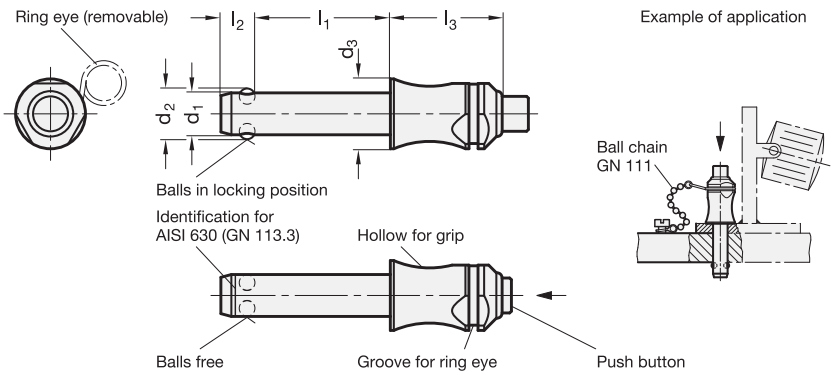

Rost frei — Inox Stainless Steel

1 d_1 −0,04 −0,08	2 l_1 +0,6									d_2	d_3	l_2 ±1	l_3 +0,2	Load in kN ≈ (Double sided shear force) according DIN 50141	
														AISI 303	AISI 630
5	10	15	20	25	30	-	-	-	-	5,5	10	6	22	14	24
6	10	15	20	25	30	35	40	45	50	7	10	7	22	21	35
8	20	25	30	35	40	45	50	-	-	9,5	14	8,2	27	38	63
10	20	25	30	35	40	45	50	60	-	12	14	9,6	27	60	100
12	25	30	35	40	45	50	60	70	80	14,5	20	10,6	32	87	144
16	30	35	40	45	50	60	70	80	-	19	20	14	32	155	257
20	60	80	100	120	-	-	-	-	-	25	28	20,5	39	244	403

Specification

- **GN 113.3**
  Stainless Steel AISI 303
- **GN 113.4**
  Stainless Steel AISI 630
  - precipitation-hardened
  - hard coated
- Balls
  Stainless Steel AISI 420C
- Spring
  Stainless Steel AISI 631
- temperature resistant up to 250 °C
- *Stainless Steel characteristics → Page 1144*
- RoHS compliant

Accessory

- Ball chains GN 111 / GN 111.5 → *Page 477*
- Retaining cables GN 111.2 → *Page 478*
- Spiral retaining cables GN 111.4 → *Page 479*

Information

Stainless Steel-Ball lock pins GN 113.3 / GN 113.4 are used for quick fixing, connecting and locking of various parts and workpieces. A typical application is locating pins which have often to be removed and installed again.

By pressing the spring loaded push button both balls are unlocked and by releasing it the balls are locked again.

Ball lock pins GN 113.3 / GN 113.4 are renowned for their compactness. The eye ring is enclosed unmounted.

Ball lock pins GN 113.4 have an extreme load capacity, the pin is made of heavy duty, hardened and highly abrasion-resistant stainless steel.

The load values given in the above table at shear stress are theoretically obtained and indicative only. They are non-binding recommended values and rule out any liability. They constitute no general warranty of quality and condition. The user must determine from case to case whether a product is suitable for the intended use.

see also...
- *Range of locking pins → Page 466*

Ball lock pin, AISI 303		
1 2	1	d_1
GN 113.3-6-20	2	l_1

Ball lock pin, AISI 630		
1 2	1	d_1
GN 113.4-8-35	2	l_1

Stainless Steel-Ball lock pins

with knob

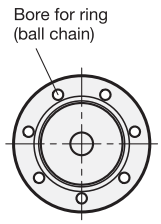

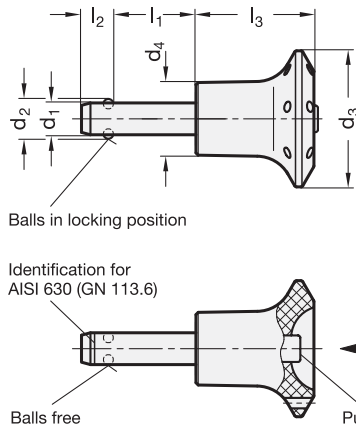

Example for application

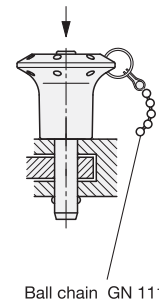

Inox
Stainless
Steel

1 d_1 $^{-0,04}_{-0,08}$	2 l_1 +0,6									d_2	d_3	d_4	l_2 ±0,2	l_3 −0,2	Locating bore H11	Load in kN ≈ (Double sided shear force) according DIN 50141	
																AISI 303	AISI 630
5	10	15	20	25	30	-	-	-	-	5,5	30	16	6	26	5	14	24
6	10	15	20	25	30	35	40	45	50	7	30	16	7,1	26	6	21	35
8	20	25	30	35	40	45	50	-	-	9,5	35	19	8,2	32,5	8	38	63
10	20	25	30	35	40	45	50	60	-	12	35	19	9,6	32,5	10	60	100
12	25	30	35	40	45	50	60	70	80	14,5	42	25	10,6	39	12	87	144
16	30	35	40	45	50	60	70	80	-	19	42	25	14	39	16	155	257

Specification

- **GN 113.5**
  Pin Stainless Steel AISI 303
- **GN 113.6**
  Pin Stainless Steel AISI 630
  - precipitation-hardened
  - hard coated
- Knob
  Plastic (Polyamide PA)
  - black-grey / red
  - temperature resistant up to 80 °C
- Balls
  Stainless Steel AISI 420C
- Spring
  Stainless Steel
  German Material No. 1.4565
- *Stainless Steel characteristics → Page 1144*
- RoHS compliant

Accessory

- Ball chains GN 111 / GN 111.5 → *Page 477*
- Retaining cables GN 111.2 → *Page 478*
- Spiral retaining cables GN 111.4 → *Page 479*

Information

Stainless Steel-Ball lock pins GN 113.5 / GN 113.6 are used for quick fixing, connecting and locking of various parts and workpieces. A typical application is locating pins which have often to be removed and installed again. By pressing the spring loaded push button both balls are unlocked and by releasing it, the balls are locked again.

Ball lock pins GN 113.6 have an extreme load capacity, the pin is made of heavy duty, hardened and highly abrasion-resistant stainless steel.

The load values given in the above table at shear stress are theoretically obtained and indicative only. They are non-binding recommended values and rule out any liability. They constitute no general warranty of quality and condition. The user must determine from case to case whether a product is suitable for the intended use.

see also...

- *Range of locking pins → Page 466*

Ball lock pins, AISI 303	1	d_1
1 2 GN 113.5-8-25	2	l_1

Ball lock pins, AISI 630	1	d_1
1 2 GN 113.6-16-50	2	l_1

Stainless Steel-Ball lock pins

with T-Handle

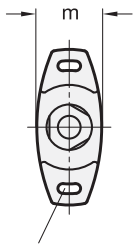

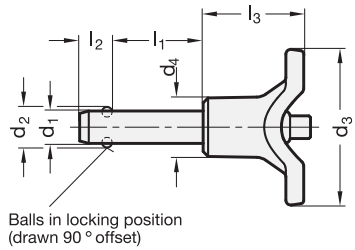

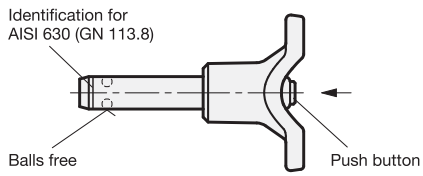

Inox
Stainless
Steel

1 d_1 $^{-0,04}_{-0,08}$	2 l_1 +0,6									d_2	d_3	d_4	l_2 ±0,2	l_3	m	Location bore H11	Load in kN (Double sided shear force) according DIN 50141	
																	AISI 303	AISI 630
5	10	15	20	25	30	-	-	-	-	5,5	40	13,5	6	25	15,5	5	14	24
6	10	15	20	25	30	35	40	45	50	7	40	13,5	7,1	25	15,5	6	21	35
8	20	25	30	35	40	45	50	-	-	9,5	48	18	8,2	31	20,5	8	38	63
10	20	25	30	35	40	45	50	60	-	12	48	18	9,6	31	20,5	10	60	100
12	25	30	35	40	45	50	60	70	80	14,5	58	24	10,6	36,5	27,5	12	87	144
16	30	35	40	45	50	60	70	80	-	19	58	24	14	36,5	27,5	16	155	257

Specification

- **GN 113.7**
  Plunger Stainless Steel AISI 303
- **GN 113.8**
  Plunger Stainless Steel AISI 630
  - precipitation-hardened
  - hard coated

This information applies to both standards:

- T-Handle
  Plastic (Polyamide PA)
  - black
  - temperature resistant up to 80° C
- Balls
  Stainless Steel AISI 420C
- Spring
  Stainless Steel
  German Material No. 1.4565
- *Stainless Steel characteristics → Page 1144*
- RoHS compliant

Accessory

- Ball chains GN 111 / GN 111.5 → *Page 477*
- Retaining cables GN 111.2 → *Page 478*
- Spiral retaining cables GN 111.4 → *Page 479*

Information

Stainless Steel-Ball lock pins GN 113.7 / GN 113.8 are used for quick fixing, connecting and locking of various parts and workpieces. A typical application is locating pins which have often to be removed and installed again.

By pressing the spring loaded push button both balls are unlocked and by releasing it, the balls are locked again.

Ball lock pins GN 113.8 have an extreme load capacity, the pin is made of heavy duty, hardened and highly abrasion-resistant stainless steel.

The load values given in the above table at shear stress are theoretically obtained and indicative only. They are non-binding recommended values and rule out any liability. They constitute no general warranty of quality and condition. The user must determine from case to case whether a product is suitable for the intended use.

see also...
- *Range of locking pins → Page 466*

Ball lock pin, AISI 303 1 2 GN 113.7-8-25	1	d_1
	2	l_1

Ball lock pin, AISI 630 1 2 GN 113.8-16-50	1	d_1
	2	l_1

Lockin pins

with axial lock (Pawl)

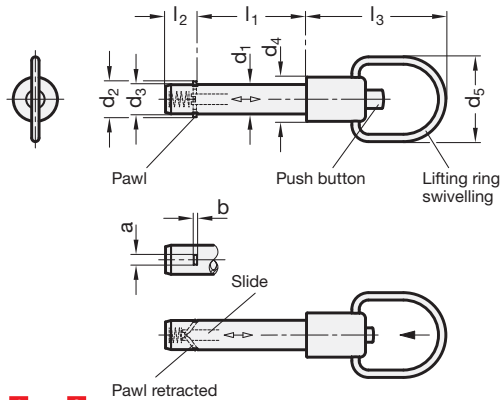

Example of application

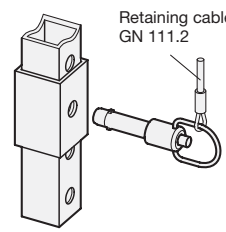

Inox Stainless Steel

d_1 −0,04	l_1 +0,4 Minimum size										a	b	d_2	d_3	d_4	d_5	l_2	l_3	Load in kN ≈ (Double sided shear force) see information	
																			GN 214.2	GN 214.3
6	10	12	16	20	25	30	35	40	45	50	2,3	0,5	7,5	5,9	12	23	7	38	14	17
8	16	20	25	30	35	40	45	50	-	-	2,8	1	10,4	7,9	12	23	8,4	38	28	35
10	20	25	30	35	40	45	50	60	-	-	3,3	1	12,8	9,9	16	28	9,8	42	38	47
12	25	30	35	40	45	50	60	70	80	-	3,8	1	14,8	11,9	16	28	11,3	42	61	75
16	30	35	40	45	50	60	70	80	-	-	4,8	1,2	19,9	15,9	20	32	14,2	46,5	113	138

Specification

- **GN 214.2**
  Plunger Steel
  zinc plated, blue passivated
- **GN 214.3**
  Plunger Stainless Steel AISI 303
- Pawl
  Stainless Steel sheet metal AISI 304
- Lifting ring
  Stainless Steel AISI 301
- Push button
  Plastic
  - red
  - temperature resistant up to 80 °C
- Spring
  Stainless Steel AISI 301
- *Stainless Steel characteristics → Page 1144*
- RoHS compliant

Accessory

- Ball chains GN 111 / GN 111.5 → *Page 477*
- Retaining cables GN 111.2 → *Page 478*
- Spiral retaining cables GN 111.4 → *Page 479*

Information

Locking pins with axial lock GN 214.2 / GN 214.3 are used for quick fixing, connecting and locking of various jig and fixture systems. A typical application is location pins which have to be often removed and re-placed again.

The two locking pawls can be retracted by pressing the button and on releasing it the pawls will be locked again.

The rectangular shape of the locking pawls in stainless steel cretaes a linear contact area with axial lock of the pin.

The version with swivelling lifting ring is ideal for the use in confined spaces.

The load values given in the above table at shear stress are theoretically obtained and indicative only. They are non-binding recommended values and rule our any liability. They constitute no general warranty of quality and condition. The user must determine from case to case whether a product is suitable for the intended use.

see also...

- *Range of locking pins → Page 466*

Steel-Pin		
GN 214.2-10-60	1	d_1
	2	l_1

Stainless Steel-Pin		
GN 214.3-16-70	1	d_1
	2	l_1

Locking pins

with axial lock (Pawl)

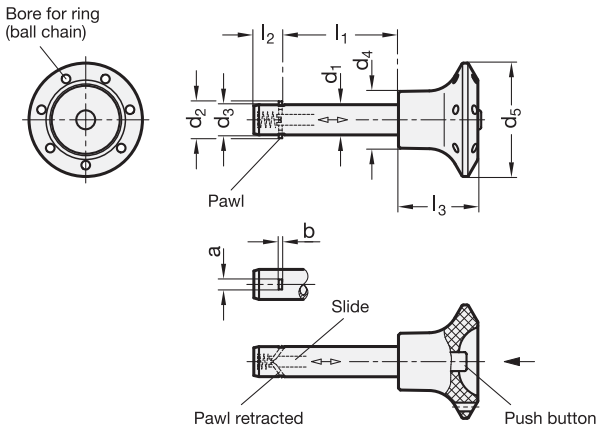

Example of application

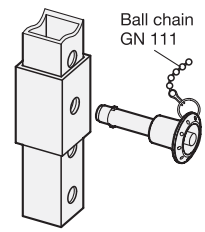

1 d_1 −0,04	2 l_1 +0,4 Minimum size										a	b	d_2	d_3	d_4	d_5	l_2	l_3	Load in kN ≈ (Double sided shear force) See information
6	10	12	16	20	25	30	35	40	45	50	2,3	0,5	7,5	5,9	15	30	7	21	14
8	16	20	25	30	35	40	45	50	-	-	2,8	1	10,4	7,9	15	30	8,4	21	28
10	20	25	30	35	40	45	50	60	-	-	3,3	1	12,8	9,9	18	34	9,8	26	38
12	25	30	35	40	45	50	60	70	80	-	3,8	1	14,8	11,9	18	34	11,3	26	61
16	30	35	40	45	50	60	70	80	-	-	4,8	1,2	19,9	15,9	22	40	14,2	32	113
20	30	35	40	45	50	60	70	80	-	-	4,8	1,2	23,9	19,8	25	40	14,8	33	187

Specification

- Pin
  Steel
  zinc plated, blue passivated
- Pawl
  Stainless Steel AISI 304 (sheet metal)
- Knob
  Plastic (Polyamide PA)
  - black-grey
  - temperature resistant up to 80 °C
- Push button / Slide
  Plastic
  - Push button: red
  - temperature resistant up to 80 °C
- Spring
  Stainless Steel AISI 301
- *Stainless Steel characteristics → Page 1144*
- RoHS compliant

Accessory

- Ball chains GN 111 / GN 111.5 → *Page 477*
- Retaining cables GN 111.2 → *Page 478*
- Spiral retaining cables GN 111.4 → *Page 479*

Information

Locking pins with axial lock GN 114.2 are used for quick fixing, connecting and locking of various jig and fixture systems. A typical application is location pins which have to be often removed and re-placed again.

The two locking pawls can be retracted by pressing the button and on releasing it the pawls will be locked again.

The rectangular shape of the locking pawls in stainless steel cretaes a linear contact area which gives an increased axial shear strength.

The load values given in the above table at shear stress are theoretically obtained and indicative only. They are non-binding recommended values and rule out any liability. They constitute no general warranty of quality and condition. The user must determine from case to case whether a product is suitable for the intended use.

see also...
- *Range of locking pins → Page 466*

How to order		
GN 114.2-10-60 (1 = 10, 2 = 60)	1	d_1
	2	l_1

Stainless Steel-Locking pins

with axial lock (Pawl)

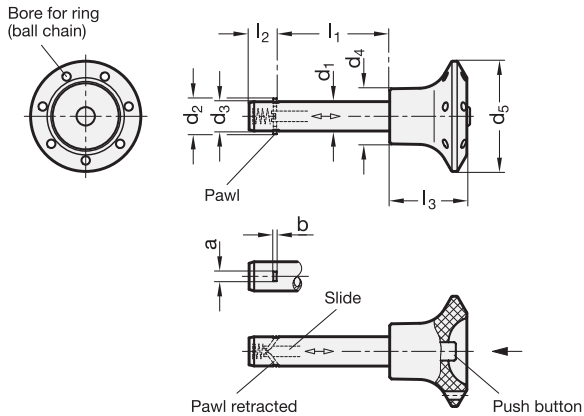

Example of application

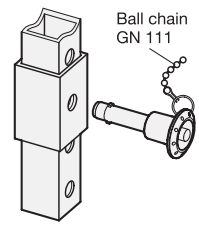

Inox Stainless Steel

d_1 –0,01	l_1 +0,4 Minimum size										a	b	d_2	d_3	d_4		d_5		l_2	l_3		Load in kN ≈ (Double sided shear force) See infomation
															GN 114.3	GN 114.6	GN 114.3	GN 114.6		GN 114.3	GN 114.6	
6	10*	12*	16	20	25	30	35	40	45	50	2,3	0,5	7,5	5,9	15	12	30	25	7	21	20	17
8	16	20	25	30	35	40	45	50	-	-	2,8	1	10,4	7,9	15	15	30	30	8,4	21	21	35
10	20	25	30	35	40	45	50	60	-	-	3,3	1	12,8	9,9	18	18	34	34	9,8	26	26	47
12	25	30	35	40	45	50	60	70	80	-	3,8	1	14,8	11,9	18	18	34	34	11,3	26	26	75
16	30	35	40	45	50	60	70	80	-	-	4,8	1,2	19,9	15,9	22	22	40	40	14,2	32	32	138
20	30	35	40	45	50	60	70	80	-	-	4,8	1,2	23,9	19,8	25	25	40	40	14,8	33	33	228

* only GN 114.3

Specification

- **GN 114.3**
  Knob / Push button / Slide
  - Plastic
  - temperature resistant up to 80 °C
  - Knob: black-grey
  - Push button: red
- **GN 114.6**
  Knob / Push button / Slide
  Stainless Steel AISI 303

This information applies to both standards:

- Pin
  Stainless Steel AISI 303
- Pawl
  Stainless Steel AISI 304 (sheet metal)
- Spring
  Stainless Steel AISI 301
- *Stainless Steel characteristics → Page 1144*
- RoHS compliant

Accessory

- Ball chains GN 111 / GN 111.5 → *Page 477*
- Retaining cables GN 111.2 → *Page 478*
- Spiral retaining cables GN 111.4 → *Page 479*

Information

Locking pins with axial lock GN 114.3 / GN 114.6 are used for quick fixing, connecting and locking of various jig and fixture systems. A typical application is location pins which have to be often removed and re-placed again.

The two locking pawls can be retracted by pressing the button and on releasing it the pawls will be locked again.

The rectangular shape of the locking pawls in stainless steel cretaes a linear contact area which gives an increased axial shear strength.

The load values given in the above table at shear stress are theoretically obtained and indicative only. They are non-binding recommended values and rule out any liability. They constitute no general warranty of quality and condition. The user must determine from case to case whether a product is suitable for the intended use.

see also...
- *Range of locking pins → Page 466*

Stainless Steel-Pin with plastic knob 1 2 **GN 114.3-10-60**	1 2	d_1 l_1

Stainless Steel-Pin with Stainless Steel-Knob 1 2 **GN 114.6-16-70**	1 2	d_1 l_1

Stainless Steel-Locking pins

with axial lock (Ball retainer)

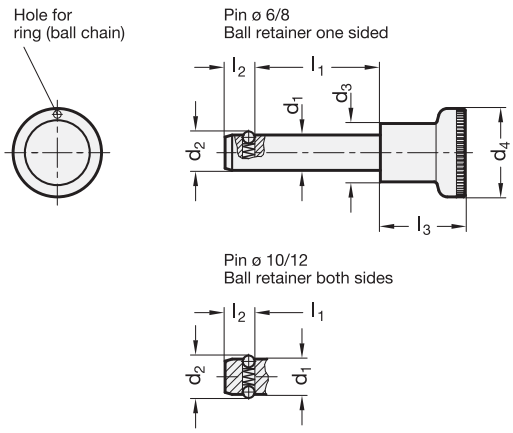

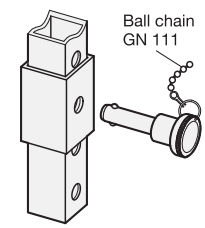

Inox
Stainless
Steel

1 d_1 $^{-0,04}_{-0,08}$	2 l_1						d_2	d_3	d_4	l_2	l_3	Locating bore	Axial holding force in N ≈	Load in kN ≈ (Double sided shear force) according DIN 50141
6	10	15	20	25	30	50	6,5	14,5	25	5	22,5	6	8	22
8	15	20	25	30	50	-	8,7	14,5	25	6,3	22,5	8	15	40
10	15	20	25	30	50	-	12	18,5	31	8,7	27	10	30	62
12	20	30	40	50	-	-	14,5	18,5	31	9,5	27	12	32	90

Specification

- Pin
  Stainless Steel AISI 303
- Knob
  Plastic (Polyamide PA)
  - black, matt
  - temperature resistant up to 80 °C
- Balls
  Stainless Steel AISI 420C
- Spring
  Stainless Steel AISI 631
- *Stainless Steel characteristics → Page 1144*
- *Plastic characteristics → Page 1141*
- RoHS compliant

Accessory

- Ball chains GN 111 / GN 111.5 → *Page 477*
- Retaining cables GN 111.2 → *Page 478*
- Spiral retaining cables GN 111.4 → *Page 479*

Information

Stainless Steel-Pins GN 124 are used for quick fixing, connecting and locking of various jig and fixture systems.

Contrary to the ball lock pins GN 113.3 ... GN 113.8 the balls are spring loaded and not rigidly locked. Hence the relatively low axial holding strength.

The load values given in the above table at shear stress are theoretically obtained and indicative only. They are non-binding recommended values and rule out any liability. They constitute no general warranty of quality and condition. The user must determine from case to case whether a product is suitable for the intended use.

see also...

- *Range of locking pins → Page 466*

How to order		
GN 124-10-20 (1 2)	1	d_1
	2	l_1

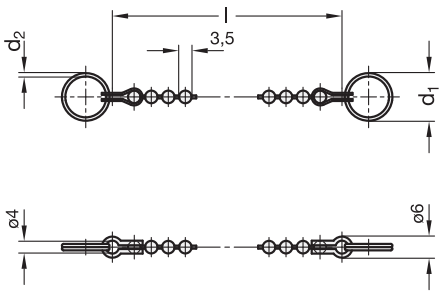

Example of application

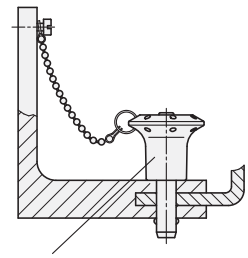

Pins GN 114.2 / 114.3
Ball lock pins GN 113.5 / 113.6

1 Length l ±3	2 d_1	d_2	Static load in N ≈ with key ring	without key ring	suitable for locking pins
200	14 *	1	50	180	* GN 113.1, GN 124 Ø 6, Ø 8 and GN 113.3, GN 113.4, GN 113.5, GN 113.6, GN 113.7, GN 113.8 GN 114.2, GN 114.3 GN 114.6 all Ø
200	18 **	1,3	90	180	
200	24	1,5	100	180	
200	30	1,8	120	180	
320	14 *	1	50	180	
320	18 **	1,3	90	180	
320	24	1,5	100	180	
320	30	1,8	120	180	
500	14 *	1	50	180	
500	18 **	1,3	90	180	
500	24	1,5	100	180	** GN 124 Ø 10, Ø 12
500	30	1,8	120	180	
1000	14 *	1	50	180	
1000	18 **	1,3	90	180	
1000	24	1,5	100	180	
1000	30	1,8	120	180	

Specification

- **GN 111**
  Ball chain
  Brass, nickel plated
- **GN 111.5**
  Ball chain
  Stainless Steel AISI 301
- Key ring
  Stainless Steel
- *Stainless Steel characteristics → Page 1144*
- RoHS compliant

Accessory

- Single key rings are supplied with code no. GN 111.3-d_1

Information

Ball chains GN 111 / GN 111.5 are mainly used in connection with ball lock pins and pins with axial lock.

The key rings are supplied unmounted. Both rings have the same Ø d_1.

The load values given in the above table at shear stress are theoretically obtained and indicative only.

They are non-binding recommended values and rule out any liability.

Ball chains		
GN 111-320-24 (1 = 320, 2 = 24)	1	**Length l**
	2	**d_1**

Stainless Steel-Ball chains		
GN 111.5-200-14 (1 = 200, 2 = 14)	1	**Length l**
	2	**d_1**

Type **A**

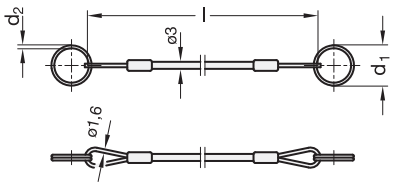

Type **B**

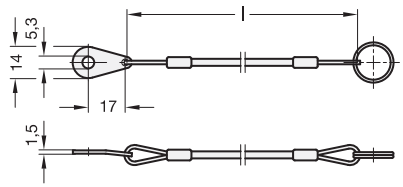

Type **C**

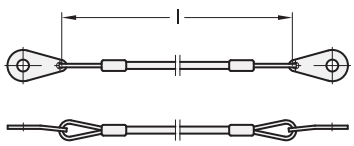

Example of application

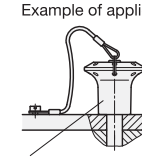

Pin
Ball lock pins

Rost frei — Inox Stainless Steel

3 Type

- **A** with 2 key rings
- **B** with fixing loop and key ring
- **C** with 2 fixing loops

1 Length l	2 d_1	d_2	Static load in N ≈ with key ring	without key ring	Type A and Type B are suitable for locking pins
150	14 *	1	50	1800	* GN 113.1, GN 124 Ø 6, Ø 8 and GN 113.3, GN 113.4, GN 113.5, GN 113.6, GN 113.7, GN 113.8, GN 114.2, GN 114.3, GN 114.6 all Ø
150	18 **	1,3	90	1800	
150	24	1,5	100	1800	
150	30	1,8	120	1800	
200	14 *	1	50	1800	
200	18 **	1,3	90	1800	
200	24	1,5	100	1800	
200	30	1,8	120	1800	
320	14 *	1	50	1800	
320	18 **	1,3	90	1800	** GN 124 Ø 10, Ø 12
320	24	1,5	100	1800	
320	30	1,8	120	1800	
500	14 *	1	50	1800	
500	18 **	1,3	90	1800	
500	24	1,5	100	1800	
500	30	1,8	120	1800	

Specification

- Retaining cable
  Stainless Steel
  coated with clear plastic
- Fixing loop
  Stainless Steel
- Key rings
  Stainless Steel
- RoHS compliant

Accessory

- Single key rings are supplied with code no. GN 111.3-d_1

Information

Retaining cables GN 111.2 are mainly used in connection with ball lock pins and pins with axial lock.

The key rings are supplied unmounted. Both rings have the same Ø d_1.

Retaining cable with 2 fixing loops		
GN 111.2-200-C (1, 3)	1	Length l
	3	Type

Retaining cable		
GN 111.2-150-14-B (1, 2, 3)	1	Length l
	2	d_1
	3	Type

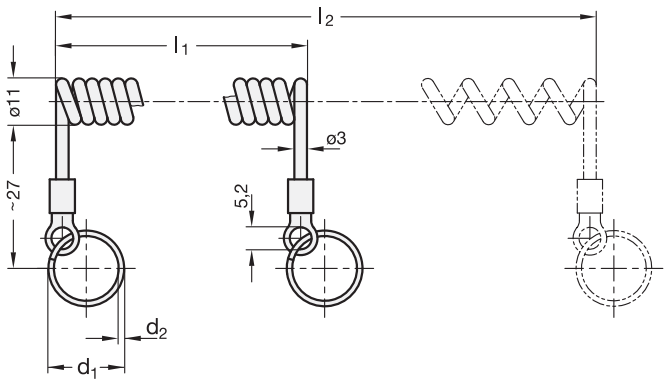

1 l_1 ±3	2 d_1	l_2 max. ≈	d_2	Static load in N ≈ with key ring	without key ring	suitable for ball lock pins and pins with axial lock
50	14*	250	1	50	60	* GN 113.1, GN 124 Ø 6, Ø 8 and GN 113.3, GN 113.4 GN 113.5, GN 113.6 GN 113.7, GN 113.8 GN 114.2, GN 114.3 GN 114.6 all Ø
50	18**	250	1,3	60	60	
50	24	250	1,5	60	60	
100	14*	500	1	50	60	
100	18**	500	1,3	60	60	
100	24	500	1,5	60	60	
200	14*	1000	1	50	60	
200	18**	1000	1,3	60	60	** GN 124 Ø 10, Ø 12
200	24	1000	1,5	60	60	

Specification

- Spiral retaining cable
  Plastic (Polyuretan PUR)
  black
- Fixing loop
  Copper, tin-plated
- Key rings
  Stainless Steel
- RoHS compliant

Accessory

- Single key rings are supplied with code no.: GN 111.3-d_1

Information

Spiral retaining cables GN 111.4 are used in connection with low weight elements e. g. ball lock pins and pins with axial lock.

They are distinguished for a large „usalbe length“.

The key rings are supplied unmounted. Both rings have the same Ø d_1.

How to order		
GN 111.4-200-18 (1 = 200, 2 = 18)	1	l_1
	2	d_1

Spring plungers

with slot

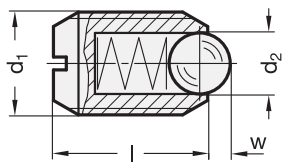

Inox
Stainless
Steel

2 Type

K	Steel, standard spring load
KS	Steel, high spring load
KN	Stainless Steel, standard spring load
KSN	Stainless Steel, high spring load

1 d_1 Type K Type KN	d_1 Type KS Type KSN	d_2	l ±0,1	w Compression	Spring load in N ≈ standard (Type K / KN) initial	Spring load in N ≈ standard (Type K / KN) end	Spring load in N ≈ high (Type KS / KSN) initial	Spring load in N ≈ high (Type KS / KSN) end
M 3	-	1,5	7	0,4	3	4,5	-	-
M 4	-	2,5	9	0,8	6	14,5	-	-
M 5	M 5	3	12	0,9	8	14	15	22
M 6	M 6	3,5	14	1	11	18	19	28
M 8	M 8	4,5	16	1,5	18	31	36	62
M 10	M 10	6	19	2	24	45	57	104
M 12	M 12	8	22	2,5	26	49	61	110
M 16	M 16	10	24	3,5	41	86	68	142
M 20	M 20	12	30	4,5	56	111	84	166
M 24	M 24	15	34	5,5	81	151	127	237

Specification

- Type K / KS
  - Housing Steel, blackened
  - Ball Steel, 1.3505, hardened
- Type KN / KSN
  - Housing Stainless Steel AISI 303
  - Ball Stainless Steel AISI 420C, hardened
- Spring Stainless Steel AISI 631
- Marking of Type KS / KSN: Housing with 2 longitudinal markings
- *Stainless Steel characteristics → Page 1144*
- RoHS compliant

Information

Spring plungers GN 615 are used as detents as well as for push-on and push-off applications and ejectors.

Steel-Spring plunger		
GN 615-M6-K (1 2)	1	d_1
	2	Type

Stainless Steel-Spring plunger		
GN 615-M8-KSN (1 2)	1	d_1
	2	Type

Spring plungers

with internal hexagon

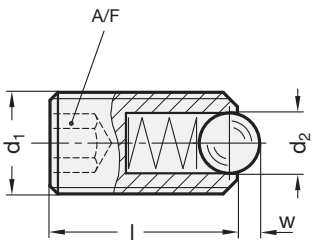

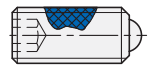

Thread locking **PFB**
Polyamide patch
for type **K** and **KN**

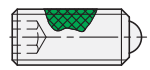

Thread locking **PFB**
Polyamide patch
for type **KS** and **KSN**

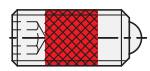

Thread locking **MVK**
Micro encapsulation precote
(for all types)

Inox
Stainless
Steel

2	Type
K	Steel, standard spring load
KS	Steel, high spring load
KN	Stainless Steel, standard spring load
KSN	Stainless Steel, high spring load

1

d_1 Type K Type KN	d_1 Type KS Type KSN	d_2	l ±0,1	w Compression	A/F	Spring load in N ≈ standard (type K / KN) initial	Spring load in N ≈ standard (type K / KN) end	Spring load in N ≈ high (Type KS / KSN) initial	Spring load in N ≈ high (Type KS / KSN) end
M 3	-	1,5	8	0,4	1,5	3	4,5	-	-
M 4	-	2,5	12	0,8	2	6	14,5	-	-
M 5	M 5	3	14	0,9	2,5	8	14	15	22
M 6	M 6	3,5	15	1	3	11	18	19	28
M 8	M 8	4,5	18	1,5	4	18	31	36	62
M 10	M 10	6	23	2	5	24	45	57	104
M 12	M 12	8	26	2,5	6	26	49	61	110
M 16	M 16	10	33	3,5	8	41	86	68	142
M 20	M 20	12	43	4,5	10	56	111	84	166
M 24	M 24	15	48	5,5	12	81	151	127	237

* not availble from stock, requires a minimum order quantity

Specification

3

- Type K / KS
  - Steel, blackened
  - Ball hardened
- Type KN / KSN
  - Stainless Steel AISI 303 / 420C
  - Ball hardened
- Marking of Type KS / KSN:
  Housing with 2 longitudinal markings
- Thread lockings (optional)
  - Polyamide patch **PFB**
    Type K/KS M 3 ... M16
    Type K*/KS* M20 ... M24
    Type KN/KSN M 3 ... M16
    Type KN*/KSN* M20 ... M24
  - Micro encapsulation* **MVK**
- RoHS compliant

Information

The **PFB** patch is a **jamming** thread locking (Polyamide patch). The coating for type K or KN (standard spring load) is indicated blue, for type KS or KSN (high spring load) green. For this type of thread locking a relatively high torque is required. Therefore this version with internal hexagon is more preferable than the version with slot (GN 615).

MVK (Micro encapsulation) is a **gluing** thread locking (indicated red).

see also...
- *More information to thread lockings → Page 1128*

Spring plunger 1 2 GN 615.3-M8-K		
	1	d_1
	2	Type

Spring plunger with thread locking 1 2 3 GN 615.3-M6-KN-PFB		
	1	d_1
	2	Type
	3	Thread locking

Spring plungers

with bolt / with slot

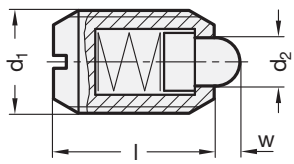

Inox
Stainless
Steel

2 Type

B	Steel, standard spring load
BN	Stainless Steel, standard spring load
BS	Steel, high spring load
BSN	Stainless Steel high spring load

1

d_1 Type B Type BN	d_1 Type BS Type BSN	d_2 −0,1	l ±0,1	w Compression	Spring load in N ≈ standard (Type B / BN) initial	Spring load in N ≈ standard (Type B / BN) end	Spring load in N ≈ high (Type BS / BSN) initial	Spring load in N ≈ high (Type BS / BSN) end
M 4	-	1,8	9	1,5 $^{+0,3}_{-0,4}$	4,5	12,5	-	-
M 5	-	2,4	12	2	5	13	-	-
M 6	M 6	2,7	14	2	6	17	11	25
M 8	M 8	3,8	16	2	16	33	23	59
M 10	M 10	4,5	19	2,5	19	42	20	54
M 12	M 12	6	22	3,5	22	57	38	96
M 16	M 16	8,5	24	4,5 ±0,3	38	78	50	100
M 20	M 20	10	30	6,5	39	81	52	133
M 24	M 24	13	34	8	72	155	91	223

Specification

- Type B / BS
  - Steel, blackened
  - Bolt hardened
- Type BN / BSN
  - Housing
    Stainless Steel AISI 303
  - Bolt
    Stainless Steel AISI 420C hardened
- Spring
  Stainless Steel AISI 631
- Marking of type BS / BSN:
  Housing with 2 longitudinal markings
- *Stainless Steel characteristics* → *Page 1144*
- RoHS compliant

Information

Spring plungers GN 615.1 are used as detents as well as for push-on and push-off applications and ejectors.

How to order		
GN 615.1-M8-B (1 = M8, 2 = B)	1	d_1
	2	Type

Spring plungers

with bolt, with internal hexagon

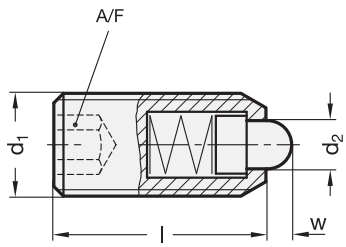

Inox
Stainless
Steel

2 Type

B	Steel, standard spring load
BN	Stainless Steel standard spring load
BS	Steel, high spring load
BSN	Stainless Steel, high spring load

1

d_1 Type B Type BN	d_1 Type BS Type BSN	d_2 −0,1	l ±0,1	w Compression	A/F	Spring load in N ≈ standard (Type B / BN) initial	Spring load in N ≈ standard (Type B / BN) end	Spring load in N ≈ high (Type BS / BSN) initial	Spring load in N ≈ high (Type BS / BSN) end
M 4	-	1,8	12	1,5 $^{+0,3}_{-0,4}$	2	4,5	12,5	-	-
M 5	-	2,4	14	2	2,5	5	13	-	-
M 6	M 6	2,7	15	2	3	6	17	11	25
M 8	M 8	3,8	18	2	4	16	33	23	59
M 10	M 10	4,5	23	2,5	5	19	42	20	54
M 12	M 12	6,2	26	3,5	6	22	57	38	96
M 16	M 16	8,5	33	4,5 ±0,3	8	38	78	50	100
M 20	M 20	10	43	6,5	10	39	81	52	133
M 24	M 24	13	48	8	12	72	155	91	223

Specification

- Type B / BS
  - Steel, blackened
  - Bolt hardened
- Type BN / BSN
  - Housing
    Stainless Steel AISI 303
  - Bolt
    Stainless Steel AISI 420C
    hardened
- Spring
  Stainless Steel AISI 631
- *Stainless Steel characteristics* → *Page 1144*
- RoHS compliant

Information

Spring plungers GN 615.4 are used as detents as well as for push-on and push-off applications and ejectors.

How to order		
GN 615.4-M10-BN (1 = M10, 2 = BN)	1	d_1
	2	Type

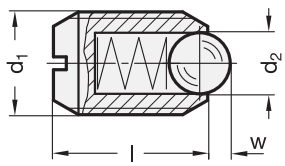

d1	d2	Length l	w compression	Spring load in N ≈ initial	end
M 6	3,5	14	0,9	12	17
M 8	5	16	1,5	20	35
M 10	6	19	1,9	25	45

Specification

- Housing
  Plastic (Polyacetal POM)
  temperature resistant up to 50 °C
- Ball
  - Stainless Steel AISI 420C hardened **NI**
  - Plastic (Polyacetal POM) **P**
- Spring
  Stainless Steel AISI 631
  (all versions)
- *Stainless Steel characteristics → Page 1144*
- *Plastic characteristics → Page 1141*
- RoHS compliant

Information

Plastic-Spring plungers GN 615.2 are used as detents as well as for push-on and push-off applications and ejectors.

These spring plungers are all stainless versions.

How to order		
GN 615.2-M6-NI	1	d_1
	2	Ball material

Spring plungers

with collar

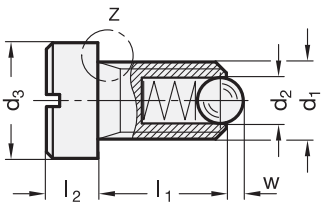

Detail Z; End of thread

M4 / M5

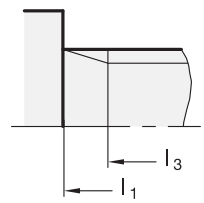

M6 ... M12

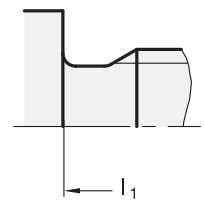

Inox
Stainless
Steel

d_1	d_2	d_3	l_1	l_2	l_3	w Compression	Spring load in N ≈ initial	end
M 4	2,5	6	6,5	3	5	0,8	8	14
M 5	3	8	8,5	4	6,7	0,9	8	14
M 6	3,5	10	9	5	-	1	11	18
M 8	4,5	13	11	5,5	-	1,5	18	31
M 10	6	16	14	6	-	2	24	45
M 12	8	18	15	7	-	2,5	26	49

Specification

- Steel **ST**
  - Housing blackened
  - Ball hardened
- Stainless Steel **NI**
  - Housing AISI 303
  - Ball AISI 420C hardened
- *Stainless Steel characteristics → Page 1144*
- RoHS compliant

Information

Spring plungers GN 815 are used as stops as well as thrust elements or ejectors.

The collar gives a defined installation position.

Steel-Spring plunger		
GN 815-M8-ST	1	d_1
	2	Material

Stainless Steel-Spring plunger		
GN 815-M12-NI	1	d_1
	2	Material

Spring plungers

with bolt

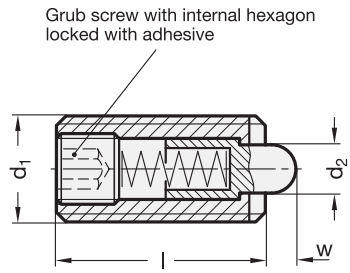

2 Type

S Bolt Steel, standard spring load

SS Bolt Steel, high spring load

K Bolt Plastic, standard spring load

1

d_1 Type S Type SS	Type K	d_2	l +0,2	A/F Internal hexagon	w $^{+0,3}_{-0,1}$ Com-pression	Spring load in N ≈ standard (Type S / K) initial	end	Spring load in N ≈ high (Type SS) initial	end	Code no. for screw driver
M 3	-	1	12	0,7	1	2	4	-	-	GN 616.5-M 3
M 4	M 4	1,5	15	1,3	1,5	4,5	16	-	-	GN 616.5-M 4
M 5	M 5	2,4	18	1,5	2,3	6	19	11	40	GN 616.5-M 5
M 6	M 6	2,7	20	2	2,5	6	19	15	43	GN 616.5-M 6
M 8	M 8	3,5	22	2,5	3	10	39	20	75	GN 616.5-M 8
M 10	M 10	4	22	3	3	10	39	20	75	GN 616.5-M 10
M 12	M 12	6	28	4	4	12	53	45	120	GN 616.5-M 12
M 16	M 16	7,5	32	5	5	45	100	64	160	GN 616.5-M 16
M 20	-	10	40	6	7	52	125	75	195	GN 616.5-M 20
M 24	-	12	52	8	10	70	170	75	245	GN 616.5-M 24

Specification

- Housing
  Steel, blackened
- Type S / SS
  Bolt Steel, hardened
- Type K
  Bolt Plastic (Polyacetal POM)
  temperature resistant up to 50 °C
- Spring
  Stainless Steel AISI 631
- Marking of Type SS:
  Housing with 2 longitudinal markings
- RoHS compliant

Accessory

- Screw drivers GN 616.5
  (Code no. see table)

On request

- with thread locking
  PFB / MVK → *Page 1128*

Information

Spring plungers GN 616 are used as detents as well as for push-on and push-off applications and ejectors.

The slot on the plunger side is provided for blind hole applications. A special screw driver GN 616.5 is available (see table).

How to order		
1 2 GN 616-M8-K	1	d_1
	2	Type

Stainless Steel-Spring plungers

with bolt

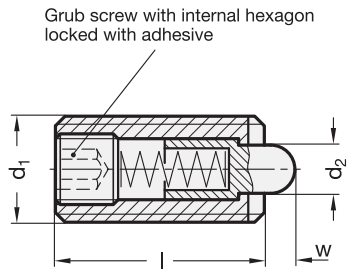

Inox
Stainless
Steel

2 Type

SN Bolt Stainless Steel, standard spring load

KN Bolt Plastic, standard spring load

1

d_1 Type SN	Type KN	d_2	l +0,2	A/F Internal hexagon	w +0,3 −0,1 Compression	Spring load in N ≈ standard (Type SN / KN) initial	end	Code no. for screw driver
M 4	M 4	1,5	15	1,3	1,5	4,5	16	GN 616.5-M4
M 5	M 5	2,4	18	1,5	2,3	6	19	GN 616.5-M5
M 6	M 6	2,7	20	2	2,5	6	19	GN 616.5-M6
M 8	M 8	3,5	22	2,5	3	10	39	GN 616.5-M8
M 10	M 10	4	22	3	3	10	39	GN 616.5-M10
M 12	M 12	6	28	4	4	12	53	GN 616.5-M12
M 16	M 16	7,5	32	5	5	45	100	GN 616.5-M16
M 20	-	10	40	6	7	52	125	GN 616.5-M20

Specification

- Housing
  Stainless Steel AISI 303
- Type SN
  Bolt
  Stainless Steel AISI 303
- Type KN
  Bolt Plastic (Polyacetal POM)
  temperature resistant up to 50 °C
- Spring
  Stainless Steel AISI 631
- *Stainless Steel characteristics → Page 1144*
- RoHS compliant

Accessory

- Screw drivers GN 616.5
  (Code no. see table)

On request

- with thread locking
  PFB / MVK → *Page 1128*

Information

Stainless Steel-Spring plungers GN 616 are used as detents as well as for push-on and push-off applications and ejectors.

The slot on the plunger side is provided for blind hole applications. A special screw driver GN 616.5 is available (see table).

How to order		
GN 616-M12-KN (1 = d_1, 2 = Type)	1	d_1
	2	Type

Spring plungers

long version

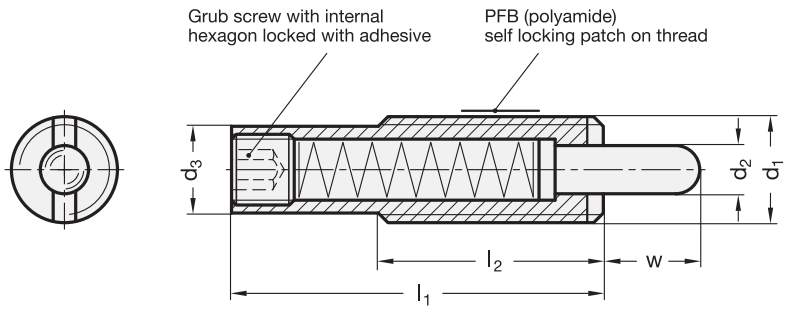

3 Type

L standard spring load
LS high spring load

1 d_1	2 w Com-pression	d_2	d_3	l_1	l_2	A/F Internal hexagon	Spring load in N ≈ standard (Type L) initial	end	Spring load in N ≈ high (Type LS) initial	end	Code no. for screw driver
M 10	8	4	7,8	35	25	3	6	16	-	-	GN 611.5-M10
M 12	10	5,5	9,5	43	35	4	4	18	7	46	GN 611.5-M12
M 16	10	8	13,4	48	35	6	7	24	10	43	GN 611.5-M16
M 16	15	8	13,4	58	35	6	9	33	10	57	GN 611.5-M16
M 16	20	8	13,4	58	35	6	4	23	-	-	GN 611.5-M16
M 16	20	8	13,4	83	35	6	-	-	18	72	GN 611.5-M16
M 16	25	8	13,4	98	35	6	13	41	20	70	GN 611.5-M16
M 16	30	8	13,4	98	35	6	13	47	20	80	GN 611.5-M16
M 16	40	8	13,4	148	35	6	13	63	21	113	GN 611.5-M16
M 16	50	8	13,4	148	35	6	7	43	13	75	GN 611.5-M16

Specification

- Steel
  blackened
- Bolt
  case hardened
- Marking of Type LS:
  Housing with 2 longitudinal markings
- RoHS compliant

Accessory

- Screw drivers GN 611.5
  (Code no. see table)

Information

Spring plungers GN 611 are used as ejectors, push-on and push-off operations in the sheet metal industry, as well as cushioners.

The slot on the plunger side is provided for blind hole application. A special screwdriver GN 611.5 is available (see table).

see also...
- *Thread locking PFB → Page 1128*

How to order		
GN 611-M16-15-L (1 2 3)	1	d_1
	2	w
	3	Type

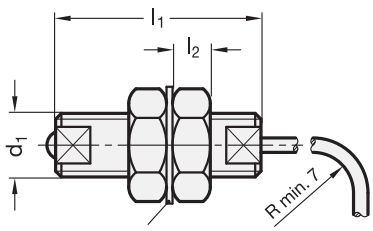

Toothed washer (zinc plated)

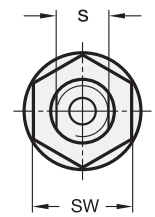

2 Type

S normally open
O normally closed

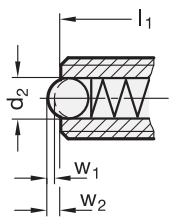

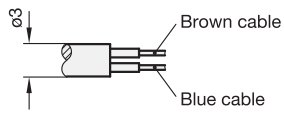

Type S normally open (NO)

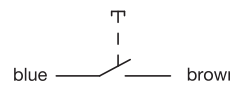

Type O normally closed (NC)

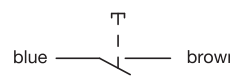

1

d_1	d_2	l_1	s	l_2	A/F	w_1 ±0,1 Switching stroke	w_2 ±0,1 compression	Spring load in N ≈ initial	end
M 6	3	33	5	3,5	10	0,3	0,8	6	13
M 8	4	36	7	5	13	0,5	1	8	16
M 10	5	40	8	6	17	0,7	1,2	10	20

Specification

- Screw
  Steel, nickel plated
- Ball
  Steel, hardened
- Hexagonal nuts
  Steel, nickel plated
- Limit switch
  - Voltage: 12 ... 24 V DC
  - Switching load recom.: 5-10 mA
  - Switching load max.: 20 mA DC
  - Life expectancy: 3 million operations
  - Temperature range: -10 °C ... +80 °C
- Supply cable PVC:
  - Ø 3; 2 phase, ≈ 2 meters long
  - max. tensile load 20 N
  - grey for Type S (normally open)
    black for Type O (normally closed)
- Protection class IP 40
- RoHS compliant

Information

Spring plungers GN 615.7 are used for end stops as well as contacts.

Simultaneously an electrical control signal can be released from the built-in limit switch.

see also...
- *IP Protection classes → Page 1137*

How to order		
GN 615.7-M8-S (1 2)	1	d_1
	2	Type

Spring plungers

Press on type

Type **NI**

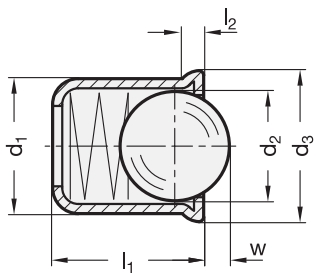

Type **MS, KU, KD**

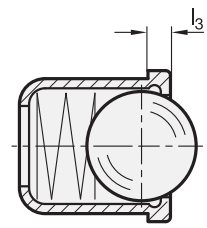

Rost frei — Inox Stainless Steel

1

d_1 +0,1 NI KU	KD	MS	d_2 NI KU KD	MS	d_3	l_1 ≈	l_2 ≈ NI	l_3 ±0,1 MS KU KD	w NI	MS KU KD	Spring load in N ≈ Type NI / MS initial	end	Type KU / KD initial	end
3	-	3	2,4	2,4	3,5	4	0,75	0,6	0,7	0,6	1,8	3,5	1,7	3,6
4	4	4	3	2,5	4,6	5	0,9	1	1	0,8	2,5	6	2,5	6,5
5	5	5	4	3,5	5,6	6	0,9	1	1,4	1	3	6,5	4,5	9
6	6	6	5	4,5	6,5	7	1	1	1,8	1,6	5,5	11,5	6,5	13
8	8	8	6,5	6	8,5	9	1,1	1	2,4	1,9	7	12,5	8	18
10	10	-	8,5	-	11	13	1,7	1,5	3,3	2,4	8,5	18,5	12	23
12	12	-	10	-	13	16	2,3	1,5	4	3,3	12	26,5	13	25

Specification

2

- Housing and Ball Stainless Steel **NI**
  - AISI 305 / 420C
  - Housing sheet-metal
  - Ball hardened
- Housing Brass **MS**
  - turned
  - Ball
    Stainless Steel AISI 420C, hardened
- Housing Plastic (Polyacetal POM) **KU**
  - temperature resistant up to 50 °C
  - Ball
    Stainless Steel AISI 420C, hardened
- Housing and Ball Plastic
  (Polyacetal POM) **KD**
  temperature resistant up to 50 °C
- Spring
  Stainless Steel AISI 631
- *Stainless Steel characteristics → Page 1144*
- *Plastic characteristics → Page 1141*
- RoHS compliant

Information

Spring plungers GN 614 are used as detents as well as for push-on and push-off applications and ejectors.

A tolerance of H7 for the location hole of d_1 is recommended.

Due to different production methods, the dimensions l_2 and l_3 are different.

see also...

- *Spring plungers GN 614.2 (double ended) → Page 492*

How to order		
GN 614-6-NI (1 2)	1	d_1
	2	Material

Side thrust pins

Holder for spring plungers GN 614

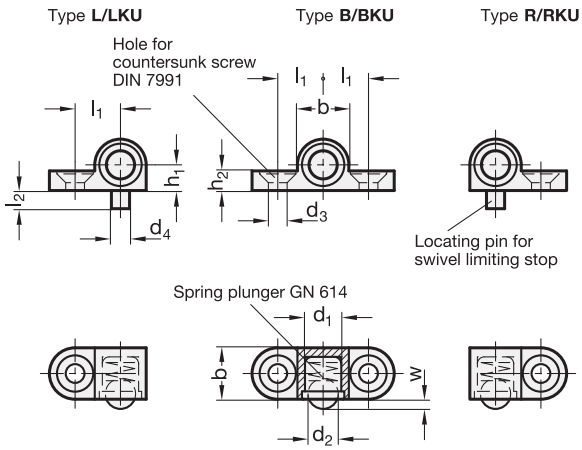

Example for positioning of a workpiece

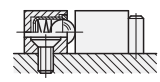

2 Type

LKU	Fixing from the left, with spring plunger
RKU	Fixing from the right, with spring plunger
BKU	Fixing from both sides, with spring plunger
L	Fixing from the left, without spring plunger
R	Fixing from the right, without spring plunger
B	Fixing from both sides, without spring plunger

1

d_1 −0,05 Bore for spring plunger GN 614	d_2 Ball-Ø	d_3 for countersunk screw DIN 7991		d_4 −0,05	b	h_1 ±0,05	h_2	l_1 ±0,05	l_2	w −0,1 Compression
6	5	3,2	M 3	3	8,5	4,25	3,2	7,5	3	1,5
8	6,5	4,3	M 4	4	10,5	5,25	4,2	9,5	4	1,8

Specification

- Zinc die casting
  nickel plated
- Spring plunger GN 614-KU → *Page 490*
  - Housing
    Plastic (Polyacetal POM)
    temperature resistant up to 50 °C
  - Ball
    Stainless Steel AISI 420C, hardened
- RoHS compliant

Information

Side thrust pins GN 614.1 are used for arresting and as press-on or press-off elements. The easy attachment using one or two countersunk screws also allows its use where a location borehole with the tolerance field H7 for the spring plunger would not be possible from its size and manufacturability.

Side thrust pins GN 614.1 consist of a holder for spring plungers and a Stainless Steel-Spring plunger GN 614 of type KU.

For types R, L and B, only a „empty“ holder for spring plungers (without spring plungers) are supplied which can then be used together with all other design variants of GN 614-6 and GN 614-8 of the types KD, MS and NI.

How to order		
GN 614.1-6-R (1 2)	1	d_1
	2	Type

Spring plungers

Double ended, press on type

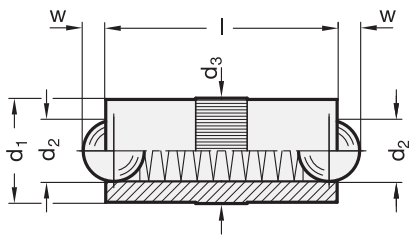

1

d_1	d_2	d_3 +0,05 (Knurl-Ø)	l	w Compression	Spring load in N ≈ initial	end
2,5	2	2,52	5,3	0,65	1,3	2,5
3	2,5	3,02	7,3	0,8	2	4,5
4	3	4,03	9	0,9	2,5	7,5
5	4	5,03	10,8	1,2	3,5	8
6	5	6,03	12,6	1,6	3,5	10,5
7	6	7,03	14	2,0	4	12
8	6,5	8,03	18	2,1	6	15

Specification

- Housing
  Brass
- Ball
  Stainless Steel AISI 420C
  hardened
- Spring
  Stainless Steel AISI 631
- *Stainless Steel characteristics → Page 1144*
- RoHS compliant

Information

Spring plungers GN 614.2 are a result of a further development of spring plungers type GN 614 for special applications.

A toletance H8 is recommnded for the locating bore of d_1.

see also...

- *Spring plungers GN 614 → Page 490*

How to order		
1 GN 614.2-4	1	d_1

Stainless Steel-Spring plungers

Plain type, without collar

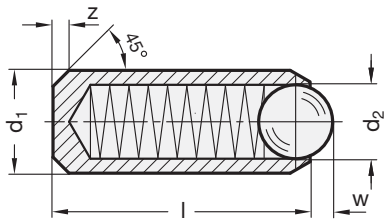

Inox
Stainless
Steel

d_1 ±0,04	d_2	l	w Compression	z Chamfer	Spring load in N ≈ initial	end
3	2	7	0,65	0,15	4,5	7,5
3,5	2,5	9	0,8	0,15	6	14,5
4	3	11	0,9	0,25	8	14
4,5	3,2	12	0,95	0,25	9,5	16,5
5	3,5	13	1	0,25	11	18
5,5	4	14	1,2	0,3	15,5	25
6	4,5	15	1,5	0,3	18	31

Specification

- Housing
  Stainless Steel AISI 303 **NI**
- Ball
  Stainless Steel AISI 420C
  hardened
- Spring
  Stainless Steel AISI 631
- *Stainless Steel characteristics* → *Page 1144*
- RoHS compliant

Information

Spring plungers GN 614.3 are installed axially through the depth of the bore whereby the dimension ”z” of the chamfer has to be taken into consideration.

Due to the thin wall of the shell press fitting is not recommended.

see also...

- *Spring plungers GN 614 (Press on type)* → *Page 490*

How to order		
GN 614.3-5,5-NI	1	d_1
	2	Material

Spring plungers

press on type

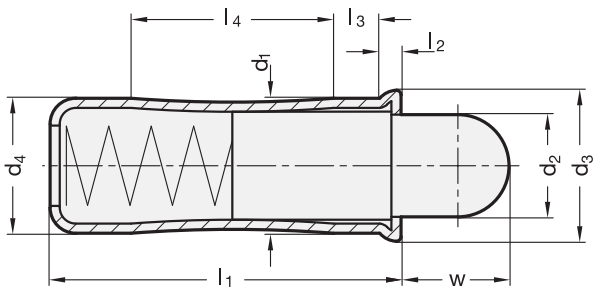

Inox
Stainless
Steel

1

d_1 +0,1	d_2	d_3	d_4 ±0,05	l_1	l_2 ≈	l_3 ≈	l_4 ≈	w Compression	Spring load in N ≈ initial	end
4	2,8	4,6	4	10,7	0,9	1,8	5,6	2,7	3	8,2
5	3,8	5,6	5	12	0,9	2,1	6	4	3,3	9
6	4,8	6,5	6	15	1	2,3	8,2	5,5	6,1	12
8	6,2	8,5	8	18	1,1	2,9	9,5	6,5	10,7	17
10	8	11	10	26	1,5	3,5	15	8	16,2	29

Specification

2

- Housing
  Stainless Steel AISI 305
- Bolt
  - Stainless Steel AISI 303 **NI**
  - Plastic **KU**
    Polyacetal POM
    white
    temperature resistant up to +50 °C
- Spring
  Stainless Steel AISI 631
- *Stainless Steel characteristics → Page 1144*
- *Plastic characteristics → Page 1141*
- RoHS compliant

Information

Spring plungers GN 614.4 are used for locking, as pressing and back-off pins, but also as impact dampers.

A tolerance of H7 for the location hole of d_1 is recommended.

see also...

- *Spring plungers GN 614 (with ball) → Page 490*

How to order		
GN 614.4-8-KU (1 = 8, 2 = KU)	1	d_1
	2	Material (Bolt)

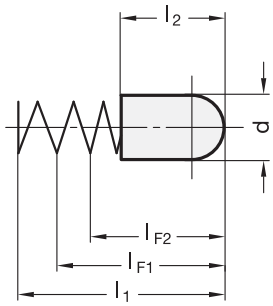

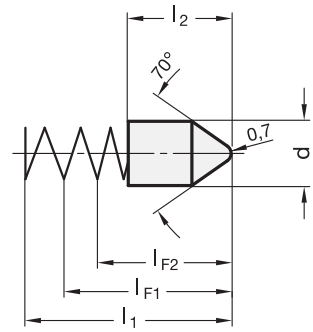

Rost frei — Inox Stainless Steel

3 Type

H Semi-spherical, Steel
HN Semi-spherical, Stainless Steel
K Pointed nose

Type **H** Semi-spherical, Steel						
d ±0,05 (1)	l_1 (2)	l_2	l_{F1}	F_1 Spring load in N ≈	l_{F2}	F_2 Spring load in N ≈
2,2	16	7,8	12	2,2	10,5	3
2,6	8	3,8	6,5	1,1	5,2	2
3	12	6	9	6,2	8,7	6,8
3	16	8,5	13	4,8	10,7	8,4
3,4	12	6	9	5	7,8	7
3,4	15	7,3	12	5,9	8,2	13,3
4	14	8	12	5	9	12,3
5	16	8	13	8	10,4	15

Type **HN** Semi-spherical, Stainless Steel						
d ±0,05	l_1	l_2	l_{F1}	F_1 Spring load in N ≈	l_{F2}	F_2 Spring load in N ≈
3	16	8	13	4,8	10,6	8,6
3,6	18	9	15	6,7	11,5	14,5
4	16	7,5	13	8	11,4	12,3

Type **K** Pointed nose						
d ±0,05	l_1	l_2	l_{F1}	F_1 Spring load in N ≈	l_{F2}	F_2 Spring load in N ≈
2,2	16	7,8	12	2,2	12,5	3
3	11	5	9	1,6	6,7	3,4
3	16	8,5	13	4,8	10,7	8,4

Specification

- Housing
  - Type H / K
    Steel, nickel plated
  - Type HN
    Stainless Steel AISI 305
- Spring
  Stainless Steel AISI 301
- *Stainless Steel characteristics → Page 1144*
- RoHS compliant

Information

Spring loaded shells GN 610 have been designed for applications where in a confined space relatively long strokes are required. In such cases the depth of the mounting hole is determined by the preload required.

How to order		
GN 610-3,4-15-H (1 2 3)	1	d
	2	l_1
	3	Type

Ball buttons

for spring plungers

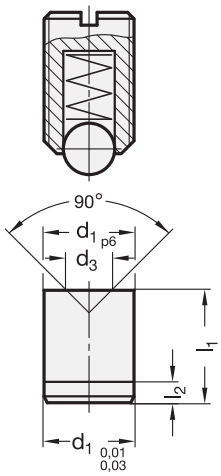

$$s = w \left(\frac{d_2 + d_3}{2} - \frac{\sqrt{2}}{2} d_2 \right)$$

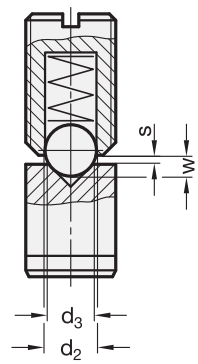

1

d_1 p6	d_2	d_3	l_1 ±0,05	l_2	w	s for GN 614	s for GN 615 GN 615.2 GN 615.3	s for GN 615.1	s for GN 616
4		1,5	5	2		-	M 4=0,6	M 4=1,1	M 4=1,1
5		2	6	2		Ø 4=0,4	M 5=0,4	M 5=1,5	M 5=1,8
6	see	2	8	2	see	Ø 5=0,8	M 6=0,6	M 6=1,6	M 6=2,1
8	spring	3	10	2	spring	Ø 6=1,1	M 8=0,9	M 8=1,3	M 8=2,2
10	plunger	4	12	3	plunger	Ø 8=1,2	M 10=1,2	M 10=1,4	M 10=1,8
12		6	14	3		Ø 10=1,9	M 12=1,2	M 12=1,7	M 12=2,2
16		8	18	3		Ø 12=1,9	M 16=1,6	M 16=2,3	M 16=2,5

Specification

- Steel
  hardened and ground
- *ISO-Fundamental Tolerances → Page 1132*
- RoHS compliant

Information

Ball buttons GN 249 are mainly used with spring plungers when a non-wearing and exact positioning is needed.

These ball buttons are especially recommended for use with spring plungers with high spring loads.

see also...

- *Spring plungers GN 614 → Page 490*
- *Spring plungers GN 615 → Page 480*
- *Spring plungers GN 615.1 → Page 482*
- *Plastic-Spring plungers GN 615.2 → Page 484*
- *Spring plungers GN 615.3 → Page 481*
- *Spring plungers GN 616 → Page 486*

How to order		
1 GN 249-8	1	d_1

Indent blocks

for spring plungers

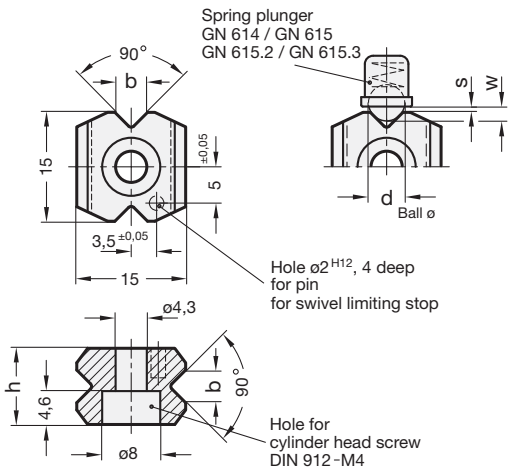

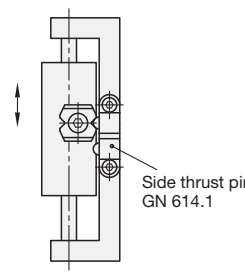

h	b ±0,1	for GN 614				for GN 615 / GN 615.2 / GN 615.3			
		Size	d	w	s min.	Size	d	w	s min.
8,5	3,4	6	5	1,6	0,9	M 8	4,5	1,5	0,8
10,5	4,5	8	6,5	1,9	1	M 10	6	2	1

Specification

- Sintered Steel
  - case hardened
  - blank
- RoHS compliant

Information

Indent blocks GN 250 are used together with spring plungers for detent or positioning of sliders, flaps and similar applications.

see also...
- *Spring plungers GN 614 → Page 490*
- *Spring plungers GN 615 → Page 480*
- *Plastic-Spring plungers GN 615.2 → Page 484*
- *Spring plungers GN 615.3 → Page 481*
- *Side thrust pins GN 614.1 → Page 491*

How to order		
GN 250-8,5	1	h

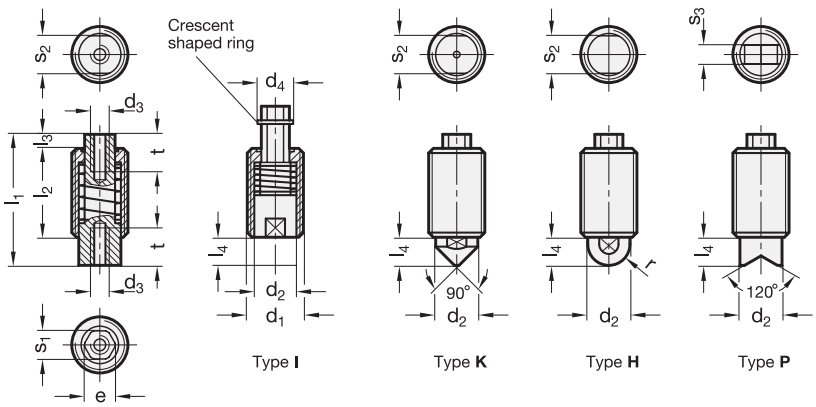

2 Type

- **I** Female thread
- **K** Pointed nose
- **H** Semi-spherical, Steel
- **P** Prism (120°)

3 Identification

- **1** standard spring load
- **2** high spring load

1

d_1	d_2	d_3	d_4	e	l_1	l_2	l_3	l_4	r	s_1	s_2	s_3	t min.	Spring load in N ≈ standard Identification 1 initial	end	high Identification 2 initial	end
M 12 x 1,5	9	M 4	7,6	6,5	28	19	3	6	4,5	6	8	4	8	16	35	18	56
M 16 x 1,5	12	M 5	8,8	7,8	38	27	3	8	6	7	10	6	10	25	71	45	125
M 20 x 1,5	14,5	M 6	11,4	10	47	33	4	10	7,2	9	12	8	12	40	130	65	200

Specification

- Steel
  - Threaded sleeve
    zinc plated, blue passivated
  - Spring bolt
    case hardened, blackened
- Identification
  - standard spring load:
    Crescent shaped ring
    phosphated (anthracite)
  - high spring load:
    Crescent shaped ring
    zinc plated, blue passivated
- RoHS compliant

Information

Spring elements GN 513 are universal pressure elements used as detents, positioners or for clamping with spring pressure. The spring loaded nose can be used for a push-on or push-off operation. In addition the spring loaded nose cannot rotate.

At the pulling end the female thread will accept a pulling rod or an operating knob.

Type I with a female thread at the pushing end can be fitted with a special plunger nose.

The spring element can be screwed into a thread at the hexagon on the pulling end or the spanner flats at the pushing end of the plunger.

How to order		
GN 513-M12x1,5-H-2 (1 2 3)	1	d_1
	2	Type
	3	Identification

Side thrust pins

Press on type

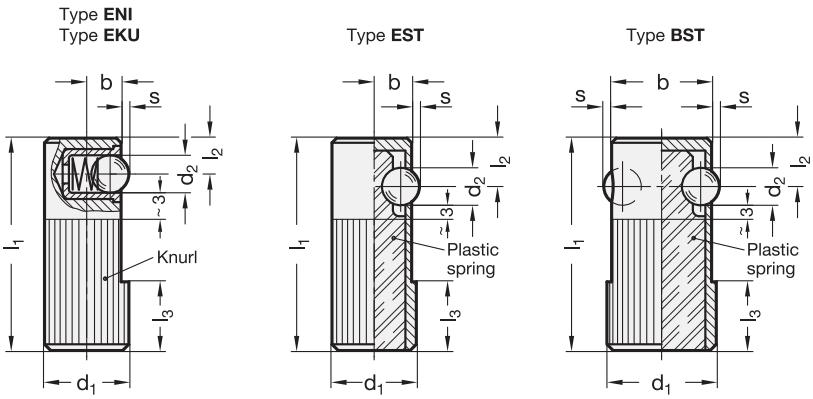

2 Type

ENI one-sided, ball Stainless Steel
EKU one-sided, ball Plastic
EST one-sided, ball Steel
BST both-sided, ball Steel

1

Type **ENI** one-sided, ball Steel
Type **EKU** one-sided, ball Plastic

d_1	d_2	b	l_1	l_2	l_3	s	Spring load in N ≈ initial	end	Locating bore
8	3	3,2	25	3,6	6	0,9	2,5	6,5	8 H8
10	4	4	30	4,2	7	1	4,5	9	10 H8
12	5	5	35	4,8	9	1,5	6,5	13	12 H8
14	6,5	5,4	40	5,8	10	1,8	8	18	14 H8

1

Type **EST** one-sided, ball Steel

d_1	d_2	b	l_1	l_2	l_3	s	Spring load in N ≈ initial	end	Locating bore
10	5,5	4,5	30	7	8	1	50	160	10 H8
12	6,5	5,5	35	8	9	1,5	60	270	12 H8
14	8	6,5	40	9	10	2	100	380	14 H8

1

Type **BST** both-sided, ball Steel

d_1	d_2	b	l_1	l_2	l_3	s	Spring load in N ≈ initial	end	Locating bore
16	5,5	15	35	7	11	1,5	36	190	16 H8
18	6,5	17	40	8	12	1,8	38	270	18 H8
22	8	21	45	9	15	2,5	40	410	22 H8

Specification

- Housing: Steel, blackened
- Sleeve (for Ball)
  - Type ENI / EKU: Plastic
  - Type EST / BST: Steel, blackened
- Ball
  - Type ENI: Stainless Steel
  - Type EKU: Plastic
  - Type EST / BST: Steel
- Spring
  - Type ENI / EKU: Stainless Steel
  - Type EST / BST: elastic plastic
- temperature resistant up to 80 °C
- RoHS compliant

Information

Side thrust pins GN 716 are designed for holding, positioning and locating a workpiece.

They have to be pressed into the housing by at least the dimension l_3, so as to ensure a positive hold.

How to order		
GN 716-12-ENI (1 = 12, 2 = ENI)	1	d_1
	2	Type

Side thrust pins

Press on type

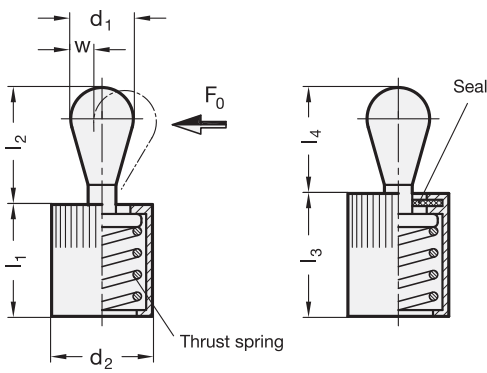

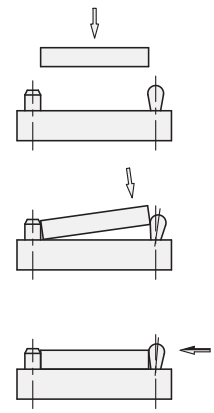

3 Type

SA thrust pin Steel, without seal
KA thrust pin Plastic, without seal
SB thrust pin Steel, with seal
KB thrust pin Plastic, with seal

1 d_1	2 Side thrust F_0 in N Thrust pin Steel Type SA / SB			Plastic Type KA / KB	a_1 see page 504	a_2 see page 504	d_2	d_3 H8 see page 504	h min. see page 504
3	10	20	40	10	1,5	3,5	6	6	7
5	20	50	100	20	2,5	5,7	10	10	12
6	40	75	150	40	3	7,7	10	10	12
8	50	100	200	50	4	8,9	12	12	14
10	100	200	300	100	5	10,7	16	16	18

d_1	l_1 –1	l_2	l_3 –1	l_4	w	x_1 see page 504	x_2 see page 504	Code no. for mounting tool
3	7	4	7	4	0,9	1	0,75	GN 715.1-3
5	11	6,7	11,5	6	1,6	1,7	1,3	GN 715.1-5.6
6	11	10,7	11,5	10	1,8	1,9	1,4	GN 715.1-5.6
8	13	13,9	14	13	2,6	2,7	2,1	GN 715.1-8
10	17	16,7	18	16	3,2	3,4	2,7	GN 715.1-10

Specification

- Housing Aluminium blank
- Type SA / SB thrust pin Steel, hardened zinc plated, blue passivated
- Type KA / KB thrust pin Plastic Polyacetal (POM)
- Thrust spring coding
  Force low thrust: grey
  medium thrust: black
  high thrust: silver
- Seal rubber NBR (Perbunan)
- *ISO-Fundamental Tolerances → Page 1132*
- *Plastic characteristics → Page 1141*
- RoHS compliant

Information

Spring loaded side thrust pins GN 715 are versatile and practical elements for holding, positioning and clamping of workpieces.

They eliminate costly alternatives, are space saving and easy to install. The knurled body requires only a hole tolerance of H8.

For easy mounting a suitable tool GN 715.1 is available (see table).

see also...

- *Technical and assembly instructions → Page 504*
- *Side thrust pins GN 713 (with thread) → Page 502*
- *Eccentric bushes GN 715.2 → Page 505*

How to order

1 2 3
GN 715-5-50-SA

1	d_1
2	Side thrust F_0
3	Type

Side thrust pins

without pressure pin, press on type

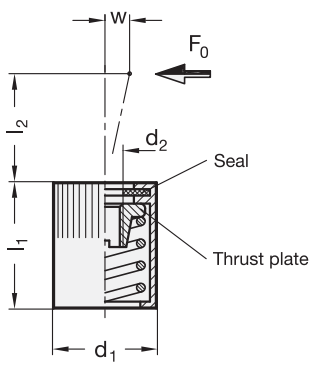

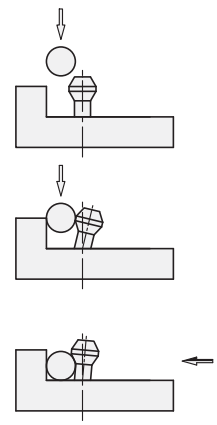

1 d_1	2 Side thrust F_0 in N ≈ at l_2			d_2	d_3 H8 see page 504	h min. see page 504	l_1 –1	l_2	w adjustable distance at l_2	Code no. for mounting tool
10	20	50	100	M4	10	12	12	4	1,6	GN 715.1-5,6
10	40	75	150	M4	10	12	12	7,5	2	GN 715.1-5,6
16	100	200	300	M6	16	18	18	11,5	3,2	GN 715.1-10

Specification

- Housing Aluminium
  blank
- Thrust plate with female thread
  hardened, blackened
- Thrust spring coding
  Force low thrust: grey
  medium thrust: black
  high thrust: silver
- Seal rubber
  NBR (Perbunan)
- *ISO-Fundamental Tolerances → Page 1132*
- *Elastomer characteristics → Page 1140*
- RoHS compliant

Accessory

- Mounting tools GN 715.1
  (Code no. see table)

On request

- Side thrust pins with thread

Information

Side thrust pins GN 714 are the result of further development of GN 715. It is left to the customer to design his own pressure pin which can be screwed into the thrust plate.

This design extends the field of applications for side thrust pins offering identical advantages i.e. they eliminate costly alternatives, are space saving and are simple to install. The knurled body requires bore to H8 tolerance only.

For easy mounting a suitable tool GN 715.1 is available (see table).

see also...

- *Technical and assembly instructions → Page 504*
- *Eccentric bushes GN 715.2 → Page 505*

How to order		
GN 714-16-200 (1 2)	1	d_1
	2	Side thrust F_0

Side thrust pins

with thread

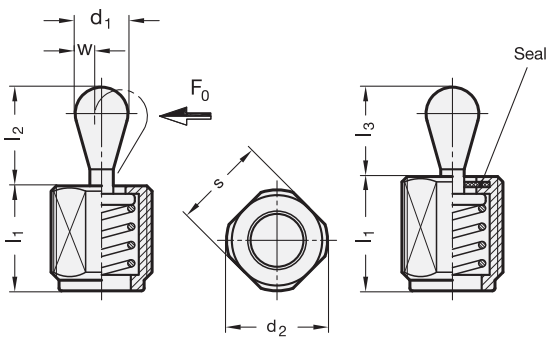

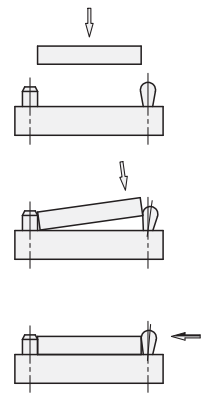

4 Type

SB thrust pin Steel, with seal

SA* thrust pin Steel, without seal

1 d_1	2 Side thrust F_0 in N ≈ at l_2			3 l_1 –1,5			d_2	a_1 see page 504	a_2 see page 504
5	20	50	100	11,5	19	26,5*	M12	2,5	5,7
6	40	75	150	11,5	19	26,5*	M12	3	7,7
10	100	200	300	18	31,5	45 *	M18 x 1,5	5	10,7

d_1	k see page 504	l_2	l_3	s	w	x_1 Page 504	x_2 Page 504	Code no. for mounting tool
5	1,5 x 45°	6,7	6	10	1,6	1,7	1,3	GN 713.1-5.6
6	1,5 x 45°	10,7	10	10	1,8	1,9	1,4	GN 713.1-5.6
10	2 x 45°	16,7	16	16	3,2	3,4	2,7	GN 713.1-10

* not availble from stock, requires a minimum order quantity

Specification

- Housing Steel
  zinc plated, blue passivated
- Thrust pin Steel, hardened
  zinc plated, blue passivated
- Thrust spring coding
  Force low thrust: grey
  medium thrust: black
  high thrust: silver
- Seal rubber
  NBR (Perbunan)
- *Elastomer characteristics → Page 1140*
- RoHS compliant

Accessory

- Mounting tools GN 713.1
  (Code no. see table)

Information

Spring loaded side thrust pins GN 713 are versatile and practical elements for holding, positioning and clamping workpieces.

They eliminate costly alternatives, are space saving and simple to install. The protruding height of the thrust pin can be adjusted with the threaded body.

For easy mounting a suitable tool GN 713.1 is available (see table).

see also...
- *Technical and assembly instructions → Page 504*
- *Side thrust pins GN 715 (Press on type) → Page 500*

How to order

1 2 3 4

GN 713-6-75-11,5-SB

1	d_1
2	Side thrust F_0
3	l_1
4	Type

Side thrust pins GN 713 → *Page 502*
Side thrust pins GN 714 → *Page 501*
Side thrust pins GN 715 → *Page 500*
Eccentric bushes GN 715.2 → *Page 505*

Technical and assembly instructions

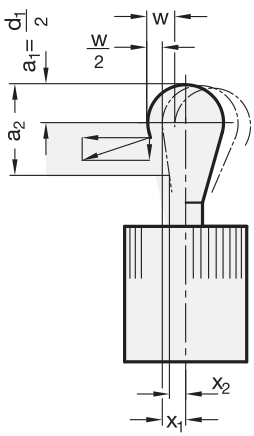

w	=	movement of pin
F	=	Side thrust in N initial thrust = F_0 end thrust = 1,1 x F_0
a_2-a_1	=	clamping range for workpiece
x	=	distance centre line – thrust point at $\frac{w}{2}$ x_1 for highest thrust point (a_1) x_2 for lowest thrust point (a_2)
l_0	=	Distance end stop – bore of thrust bush
l_0	=	$l_m + x$ l_m = average length of workpiece $\frac{l_{max.} + l_{min.}}{2}$ For contact points (workpiece height) between a_1 and a_2 a value for x has to be used lying between x_1 and x_2 (interpolation).

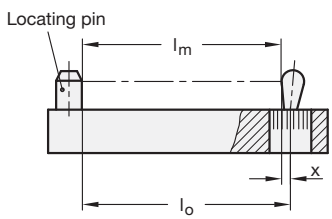

By observing the above values the full movement of the side thrust pin will be available to cover the tolerance of the workpiece.

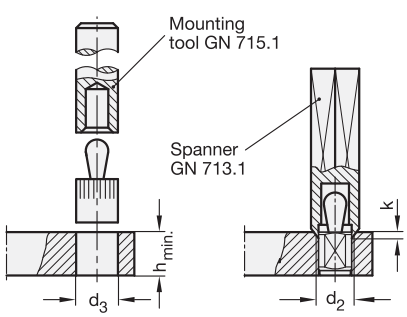

For inserting the side thrust pins the use of a mounting tool GN 715.1 or spanner GN 713.1 is recommended.

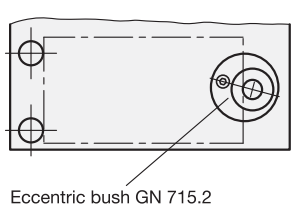

Eccentric bushes GN 715.2 are a tooling accessory for GN 714 / GN 715. They enable a precise optimum setting of side thrust pins. This allows an adjustment to l_0 to accommodate for instance a larger tolerance range on a workpiece.

Eccentric bushes

for side thrust pins GN 714 / GN 715

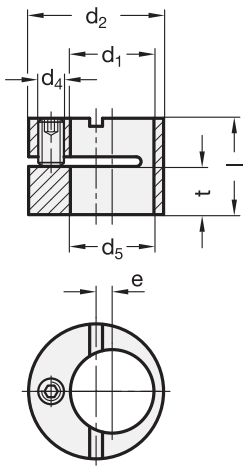

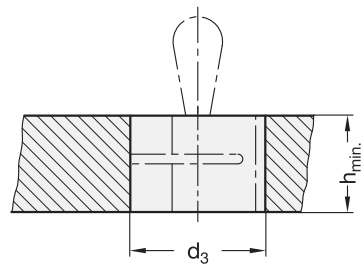

1

d_1	d_2 h9	d_3 H7	d_4	d_5 +0,1	e	h min.	l –0,2	t	for side thrust pin-Ø
6	12	12	M 4	6,2	2	10	9,9	4,4	3
10	16	16	M 4	10,2	2	12	11,9	5,4	5 | 6
12	18	18	M 4	12,2	2	14	13,9	6,6	8
16	25	25	M 6	16,2	3	18	17,9	7,9	10

Specification

- Steel
  blackened
- *ISO-Fundamental Tolerances → Page 1132*
- RoHS compliant

Information

Eccentric bushes GN 715.2 allow side thrust pins GN 715 / GN 714 to be adjusted. These bushes allow the side thrust pin to be precisely adjusted to suit the requirements for clamping of a component.

see also...

- *Side thrust pins GN 715 → Page 500*
- *Side thrust pins GN 714 → Page 501*

How to order		
1 GN 715.2-6	1	d_1